FUJI ELECTRIC

SPLIT TYPE AIR CONDITIONER

CASSETTE type (50Hz)

SERVICE MANUAL

Models	Indoor unit	Outdoor unit
	RC-25A	RO-25A
	RC-25RA	RO-25RA
	RC-30A	RO-30A
	RC-30RA	RO-30RA

CONTENTS

SPECIFICATIONS 1
OUTLINE AND DIMENSIONS 3
CIRCUIT DIAGRAM 5
REFRIGERANT SYSTEM DIAGRAM 8
INDOOR PRINTED CIRCUIT BOARD CIRCUIT DIAGRAM 10
OUTDOOR PRINTED CIRCUIT BOARD CIRCUIT DIAGRAM . . . 12
INDOOR P.C. BOARD LAYOUTS 14
OUTDOOR P.C. BOARD LAYOUTS 16
DISASSEMBLY ILLUSTRATION 17
PARTS LIST 34

S P E C I F I C A T I O N S

TYPE		COOLING	COOLING & HEATING
MODEL	IN	RC-25A	RC-25RA
	OUT	RO-25A	RO-25RA
COOLING CAPACITY	kW	7.00 - 7.10	6.95 - 7.05
HEATING CAPACITY	kW	—	7.75 - 8.00

POWER SOURCE	V	220 - 240	
	Hz	50	
RUNNING CURRENT (A)	COOL	12.8 - 13.2	12.7 - 13.0
	HEAT	—	12.0 - 12.3
INPUT WATTS (kW)	COOL	2.64 - 2.77	2.70 - 2.80
	HEAT	—	2.50 - 2.60
E.E.R. (kW/kW)	COOL	2.65 - 2.56	2.57 - 2.52
	HEAT	—	3.10 - 3.08
STARTING CURRENT	A	82	
MOISTURE REMOVAL	ℓ/h	2.5	

COMPRESSOR

TYPE		Hermetic, 2 pole, Single phase, Induction motor	
CODE		AWG5532EXC	
REFRIGERANT R-22	g	2,000	2,100

FAN SPEED (r.p.m.)	INDOOR	HIGH	490
		MED	430
		LOW	360
	OUTDOOR		720
AIR FLOW	INDOOR	m^3/h	1,100
	OUTDOOR		3,000
DIMENSIONS H x W x D (mm)	NET	IN	246 x 830 x 830
		GRILLE	35 x 940 x 940
		OUT	700 x 900 x 350
WEIGHTS [NET/GROSS] (kg)		IN	34 / 44
		OUT	67 / 77 | 70 / 80
MAX PIPE LENGTH/HEIGHT		m	25 / 15
REMOTE CONTROLLER TYPE			WIRED

ADDITIONAL REFRIGERANT CHARGE

MODELS \ PIPE LENGTH		5 m (16 ft)	10 m (33 ft)	15 m (49 ft)	20 m (66 ft)	25 m (82 ft)	Additional refrigerant
FULL CHARGE AMOUNT	RC-25A	2,000 g (70.5 oz)	2,060 g (72.7 oz)	2,120 g (74.8 oz)	2,180 g (76.9 oz)	2,240 g (79.0 oz)	12 g/m (0.4 oz / 3.3 ft)
	RC-25RA	2,100 g (74.1 oz)	2,350 g (82.9 oz)	2,600 g (91.7 oz)	2,850 g (100.5 oz)	3,100 g (109.3 oz)	50 g/m (1.8 oz / 3.3 ft)

TYPE		COOLING	COOLING & HEATING
MODEL	IN	RC-30A	RC-30RA
	OUT	RO-30A	RO-30RA
COOLING CAPACITY	kW	8.60 - 8.80	8.60 - 8.80
HEATING CAPACITY	kW	—	8.80 - 9.10

POWER SOURCE	V	220 - 240	
	Hz	50	
RUNNING CURRENT (A)	COOL	15.8 - 16.3	16.0 - 16.5
	HEAT	—	14.1 - 14.6
INPUT WATTS (kW)	COOL	3.30 - 3.40	3.35 - 3.45
	HEAT	—	2.90 - 3.00
E.E.R. (kW/kW)	COOL	2.61 - 2.59	2.57 - 2.55
	HEAT	—	3.03 - 3.03
STARTING CURRENT	A	80	
MOISTURE REMOVAL	ℓ/h	4.0	

COMPRESSOR

TYPE		Hermetic, 2 pole, Single phase, Induction motor	
CODE		H23A42QABKA	
REFRIGERANT R-22	g	2,650	2,700

FAN SPEED (r.p.m.)	INDOOR	HIGH	540	
		MED	480	
		LOW	390	
	OUTDOOR		730	760
AIR FLOW	INDOOR	m^3/h	1,200	
	OUTDOOR		3,320	3,450
DIMENSIONS H x W x D (mm)	NET	IN	246 x 830 x 830	
		GRILLE	35 x 940 x 940	
		OUT	900 x 900 x 350	
WEIGHTS [NET/GROSS] (kg)		IN	34 / 44	
		OUT	85 / 97	
MAX PIPE LENGTH/HEIGHT		m	30 / 15	25 / 15
REMOTE CONTROLLER TYPE			WIRED	

ADDITIONAL REFRIGERANT CHARGE

MODELS \ PIPE LENGTH		7.5 m (25 ft)	10 m (33 ft)	15 m (49 ft)	20 m (66 ft)	25 m (82 ft)	30 m (98 ft)	Additional refrigerant
FULL CHARGE AMOUNT	RC-30A	2,650 g (93.5 oz)	2,693 g (95.0 oz)	2,778 g (98.0 oz)	2,863 g (101.0 oz)	2,948 g (104.0 oz)	3,033 g (107.0 oz)	17 g/m (0.6 oz / 3.3 ft)
	RC-30RA	2,700 g (95.2 oz)	2,825 g (100.5 oz)	3,075 g (108.5 oz)	3,325 g (117.3 oz)	3,575 g (126.1 oz)		50 g/m (1.8 oz / 3.3 ft)

OUTLINE AND DIMENSIONS

Models : RC-25A
RC-25RA
RC-30A
RC-30RA

Unit : mm

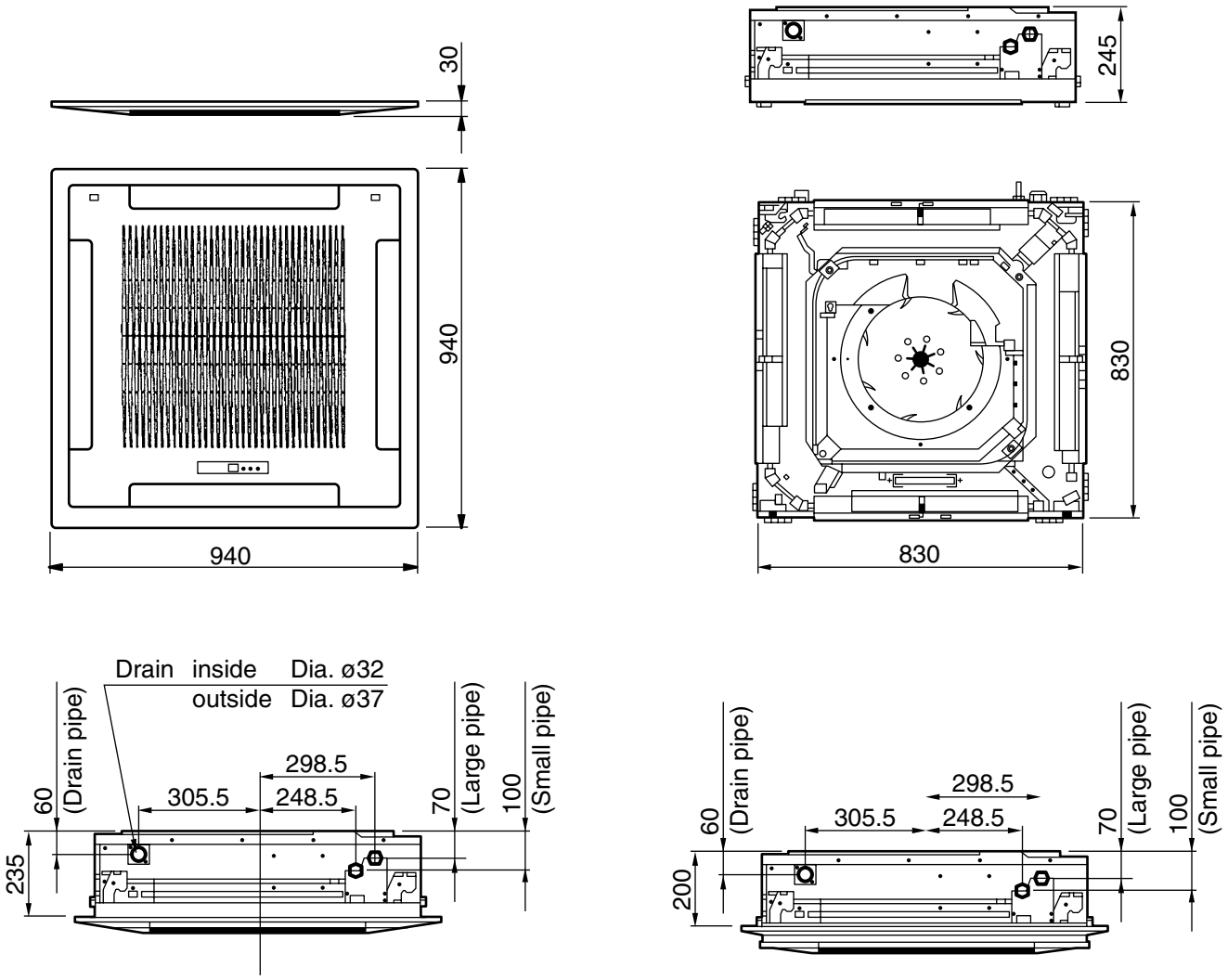

Models : RO-25A
RO-25RA

Unit : mm

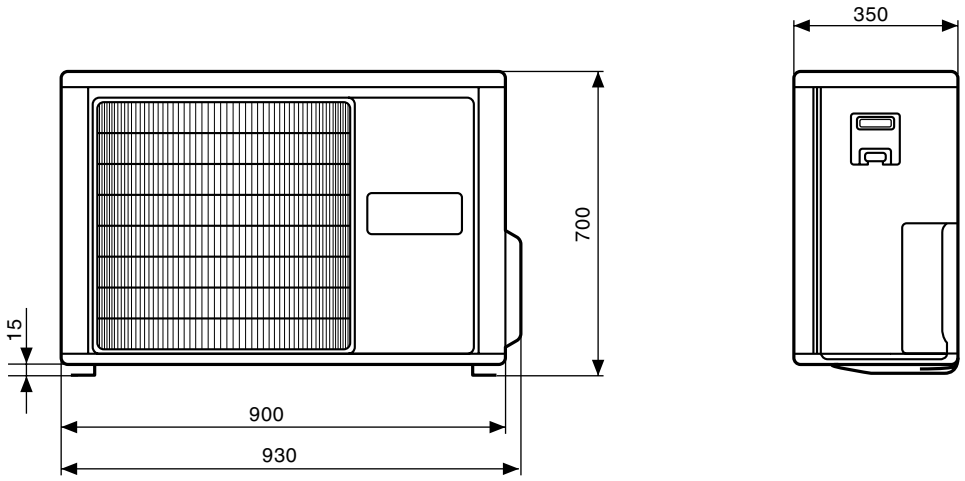

Models : RO-30A
RO-30RA

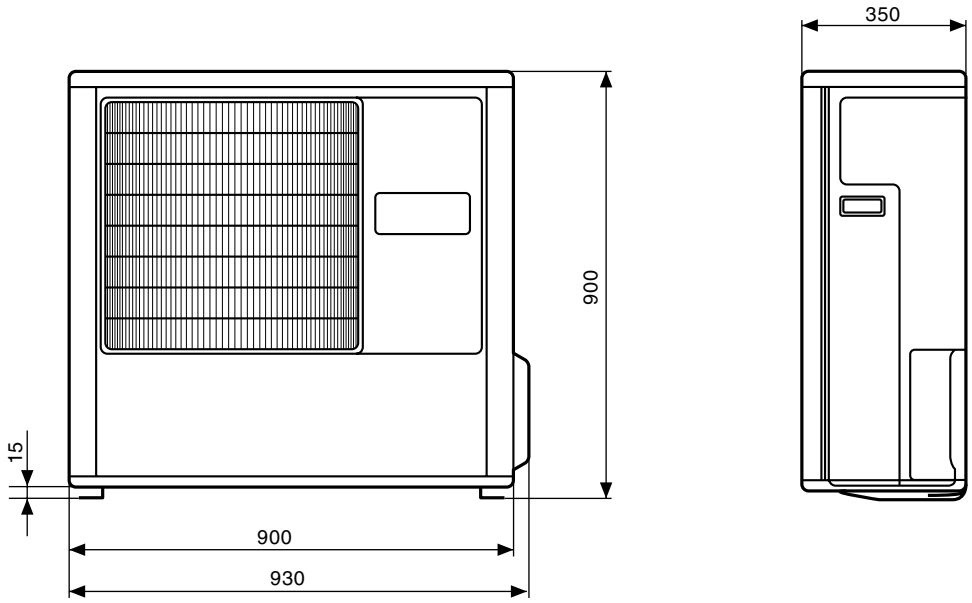

REFRIGERANT SYSTEM DIAGRAM

Models : RC-25A / RO-25A

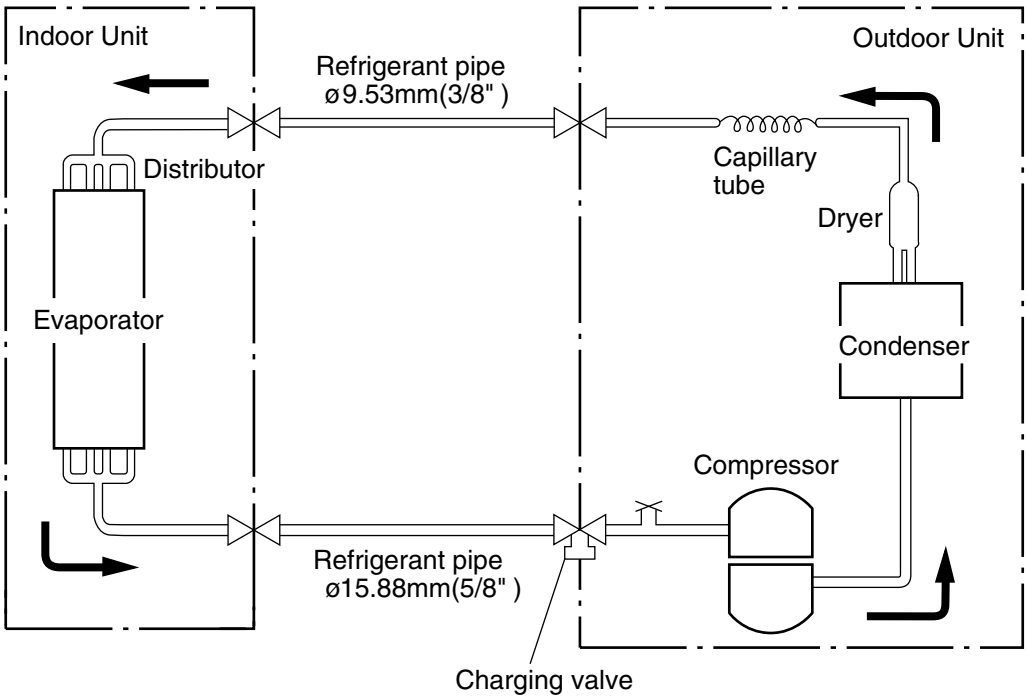

Models : RC-25RA / RO-25RA

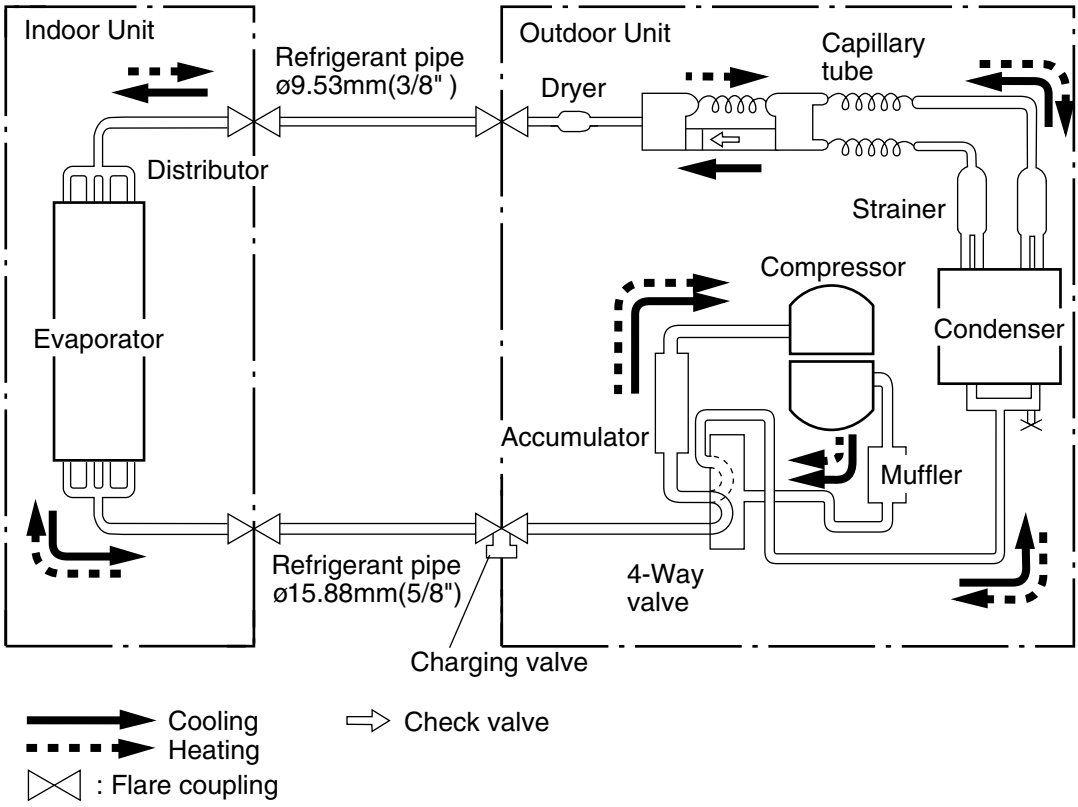

Models : RC-30A / RO-30A

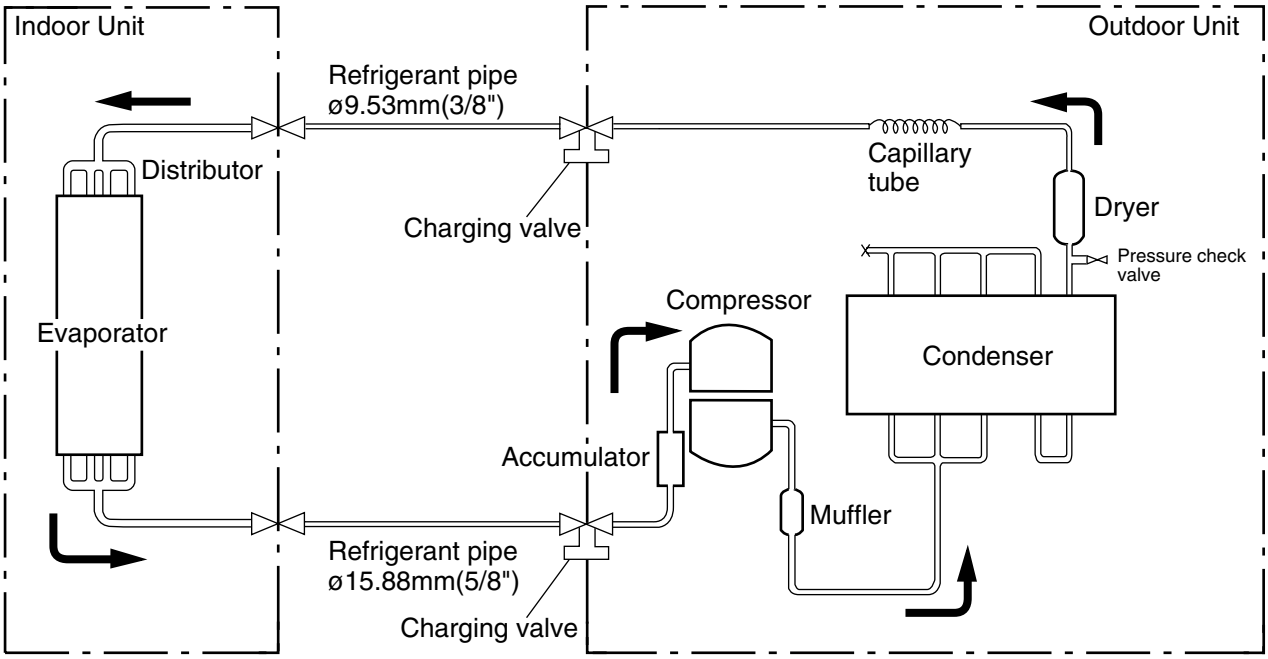

Models : RC-30RA / RO-30RA

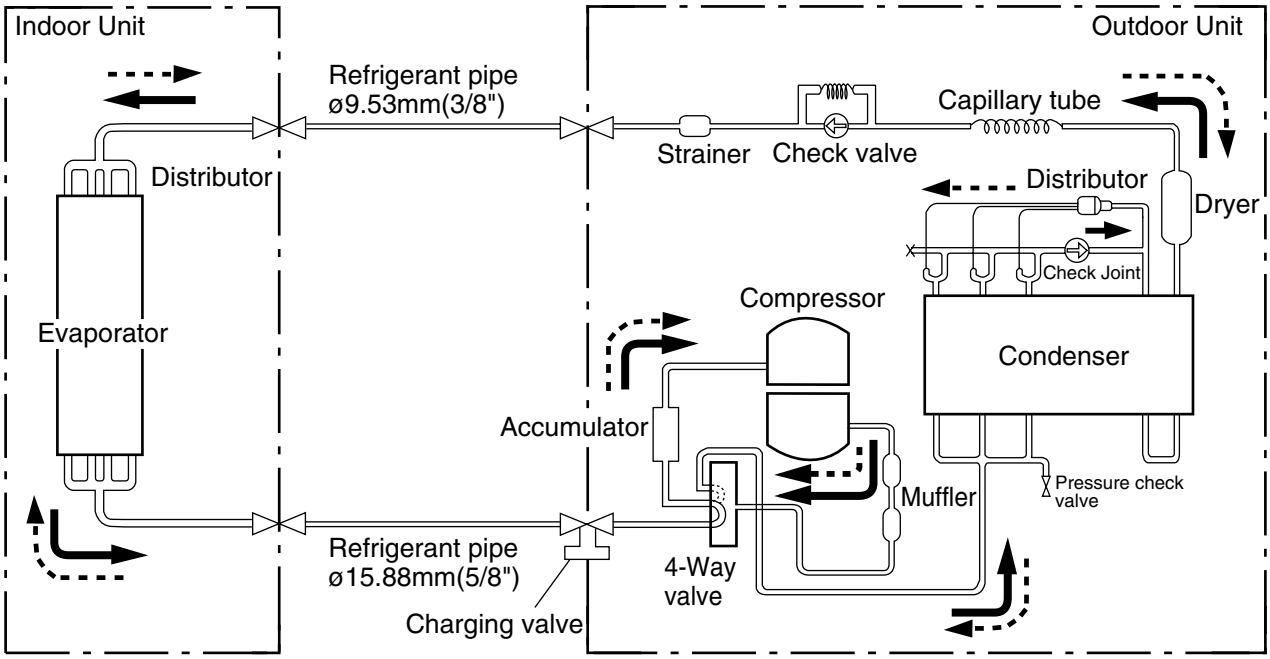

Cooling
Heating
: Flare coupling
Check valve

CIRCUIT DIAGRAM

Models : RC-25A
RC-30A

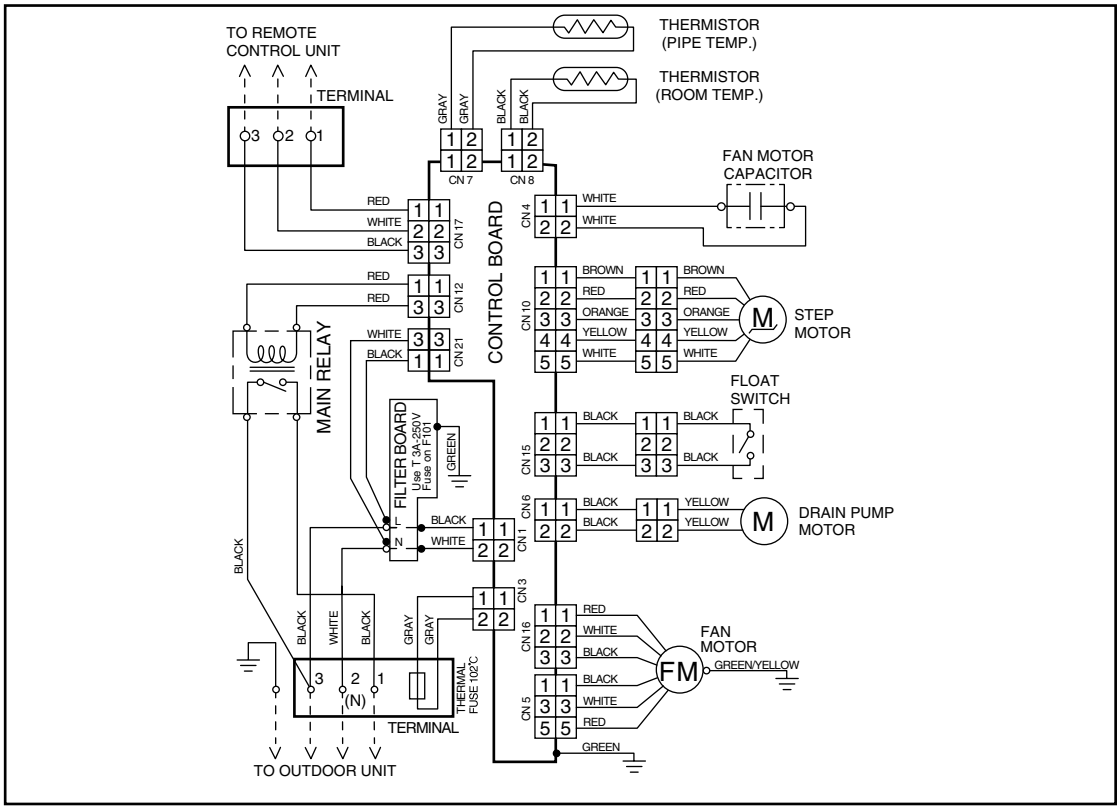

Models : RC-25RA
RC-30RA

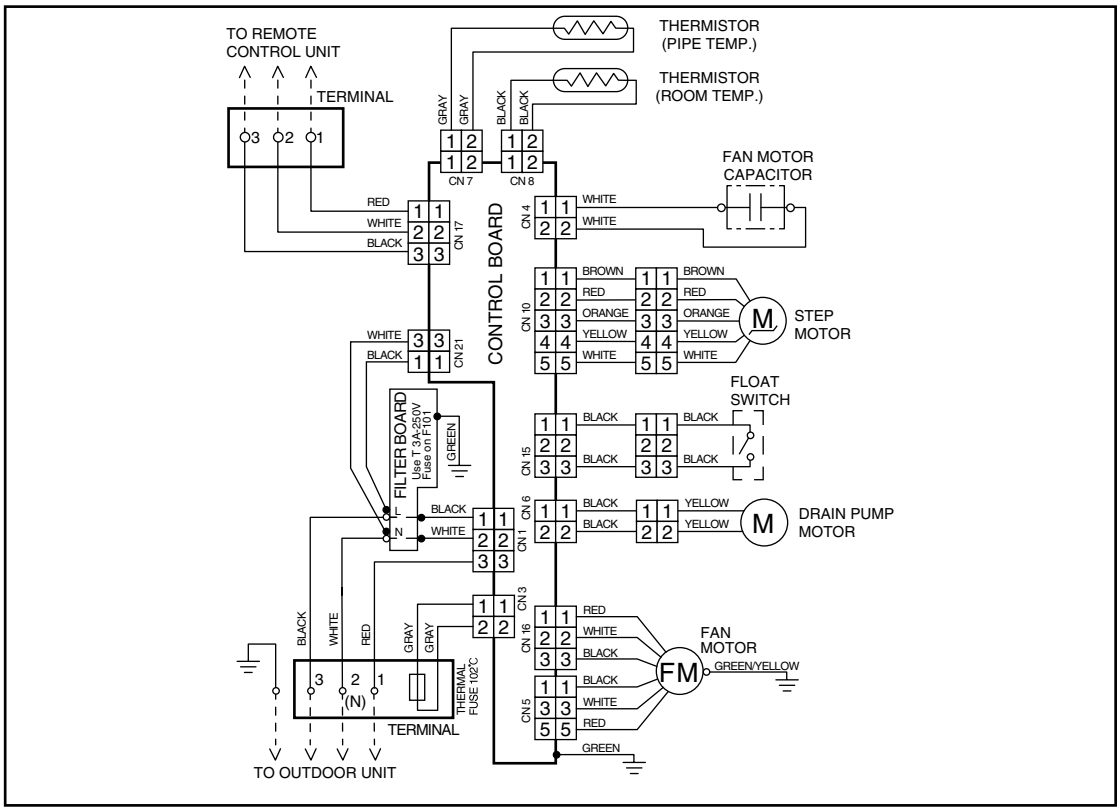

Model : RO-25A

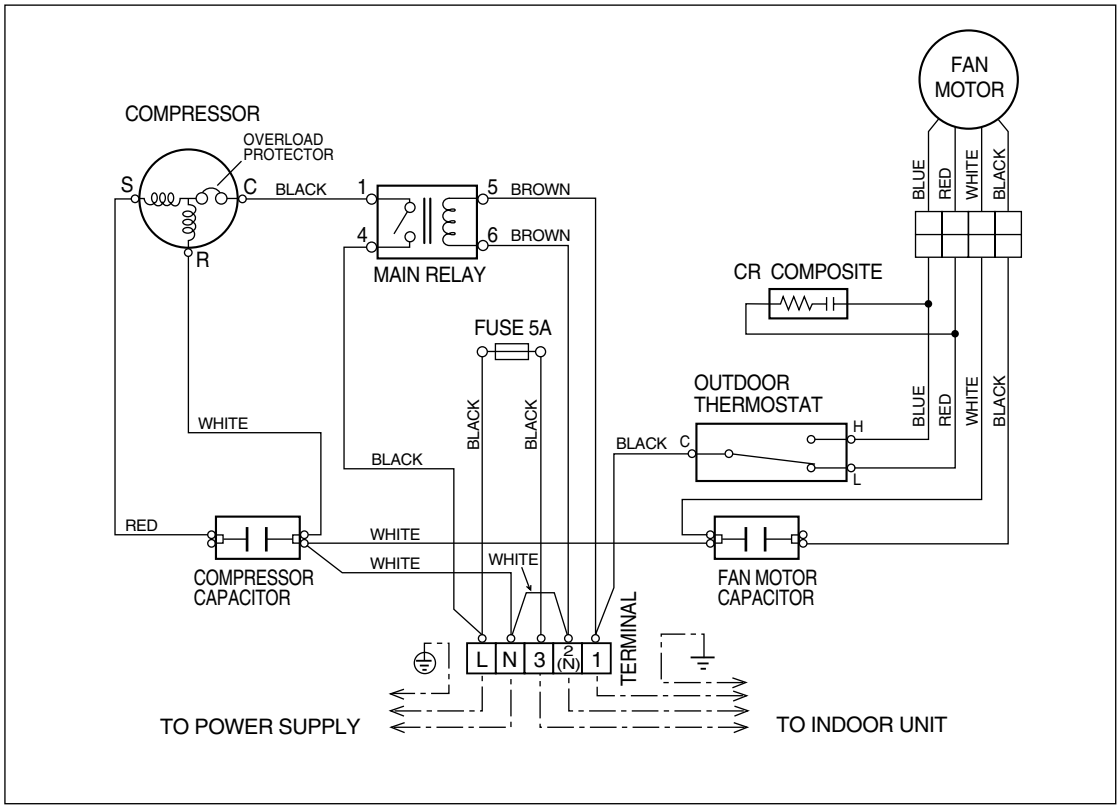

Model : RO-25RA

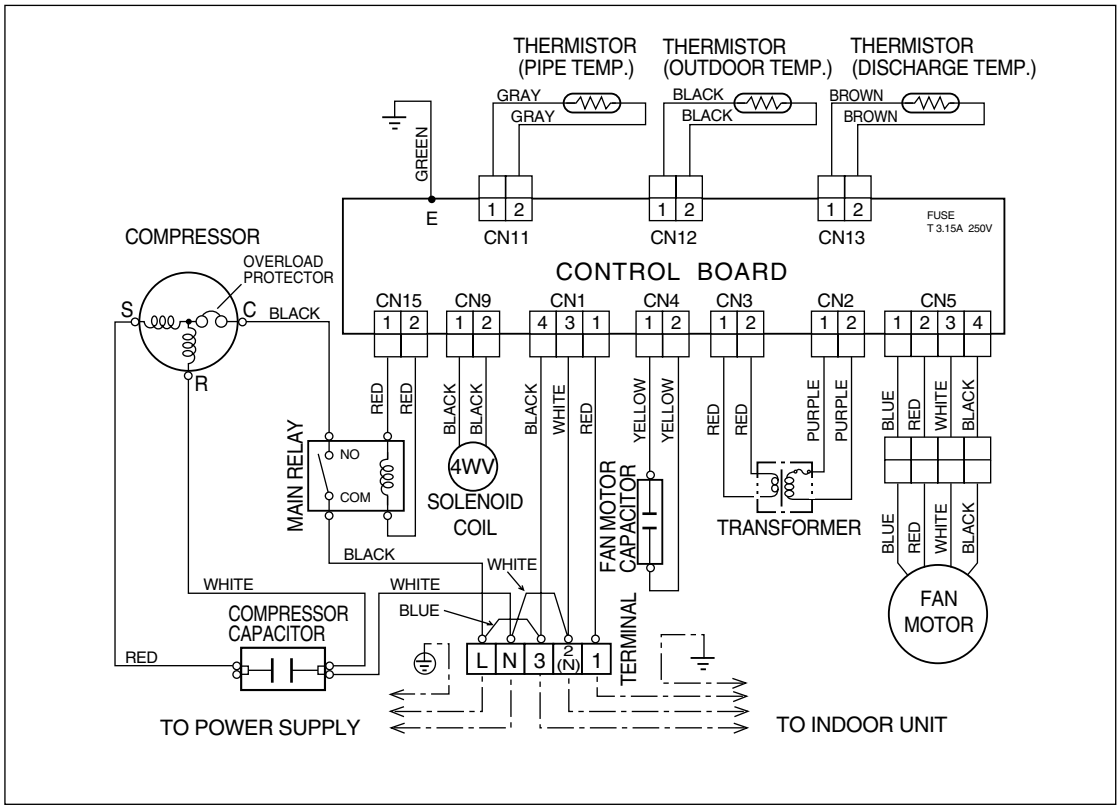

Model : RO-30A

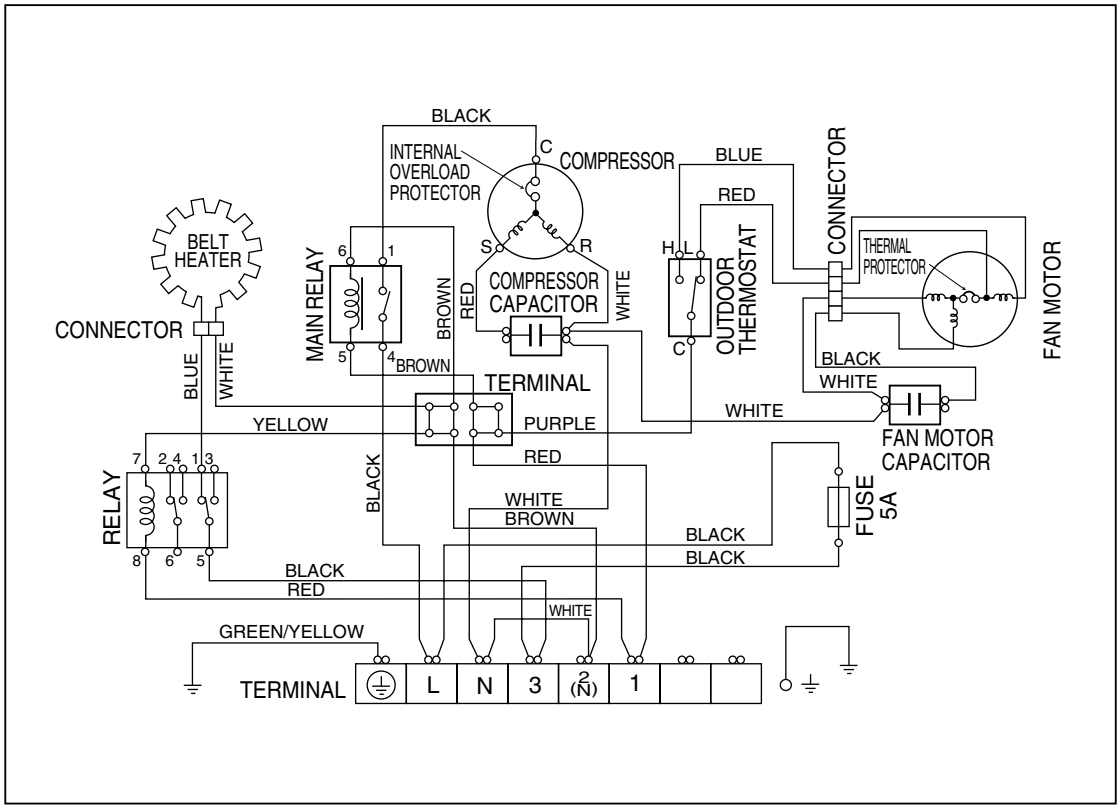

Model : RO-30RA

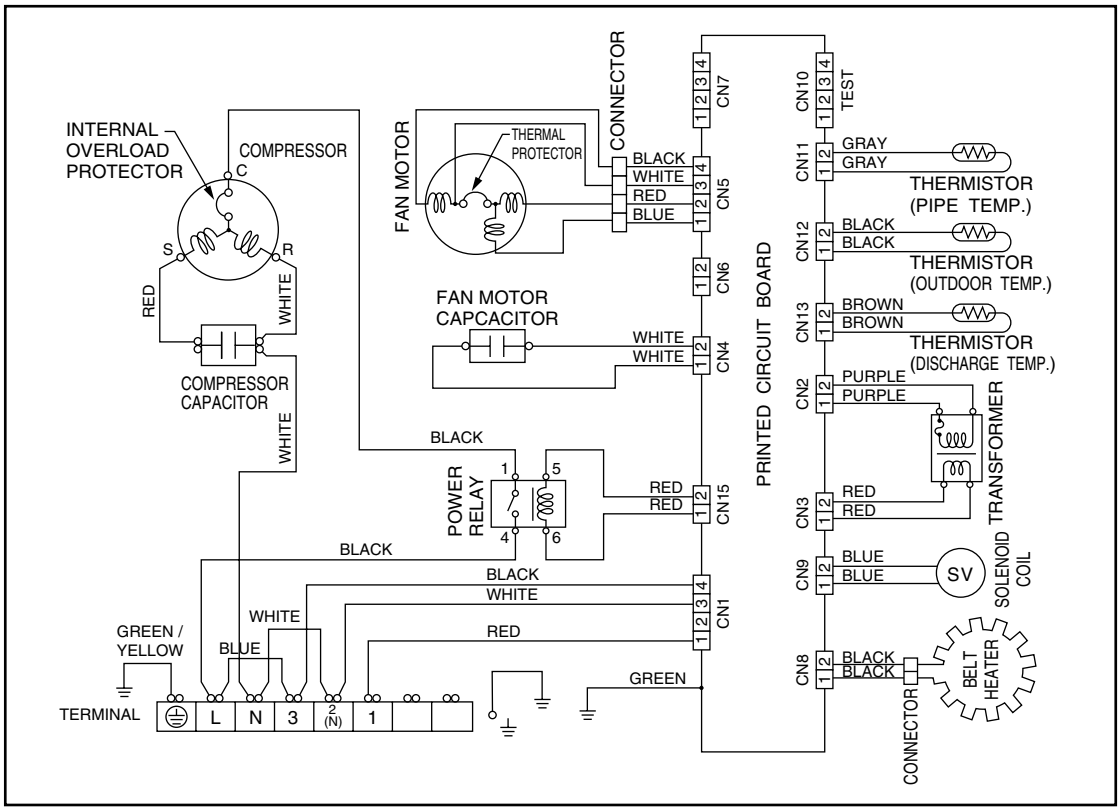

INDOOR PRINTED CIRCUIT BOARD
CIRCUIT DIAGRAM

Models : RC-25A
RC-30A

CONTROLLER PCB ASSEMBLY (MAIN PCB)
EZ-0007WSE-C

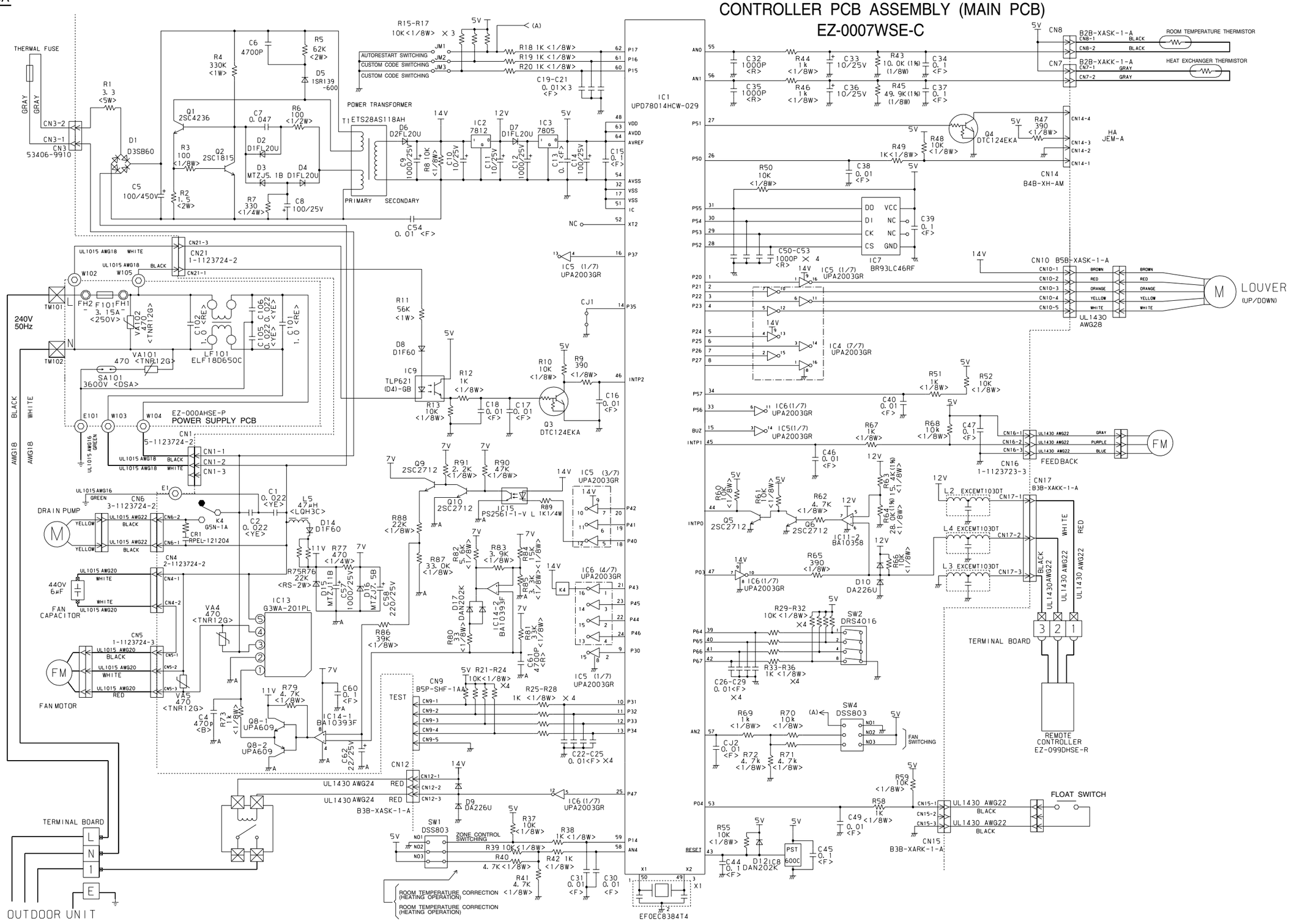

Models : RC-25RA
RC-30RA

CONTROLLER PCB ASSEMBLY (MAIN PCB)
EZ-000AHSE-C

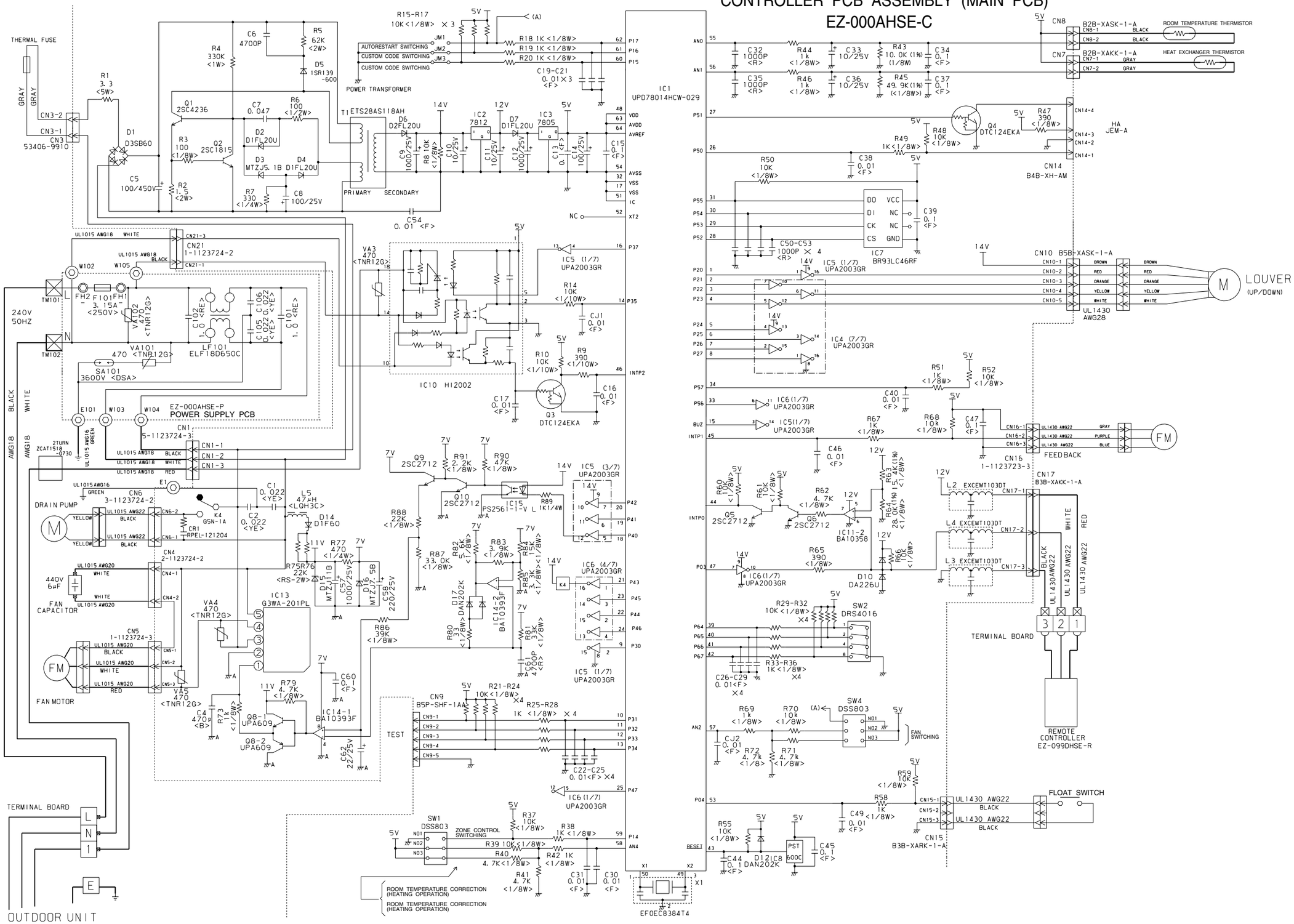

OUTDOOR PRINTED CIRCUIT BOARD
CIRCUIT DIAGRAM

Model : RO-25RA

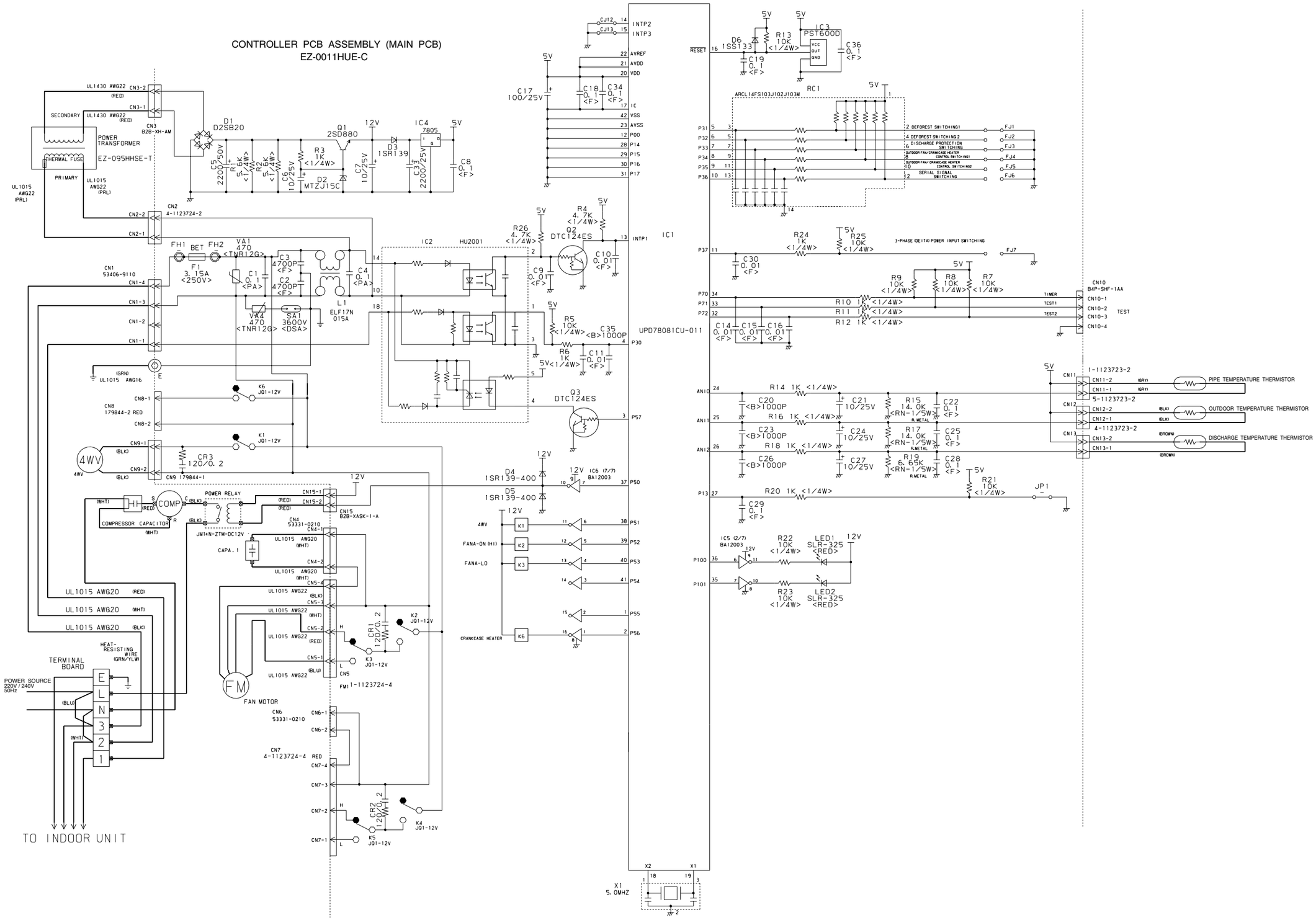

Model : RO-30RA

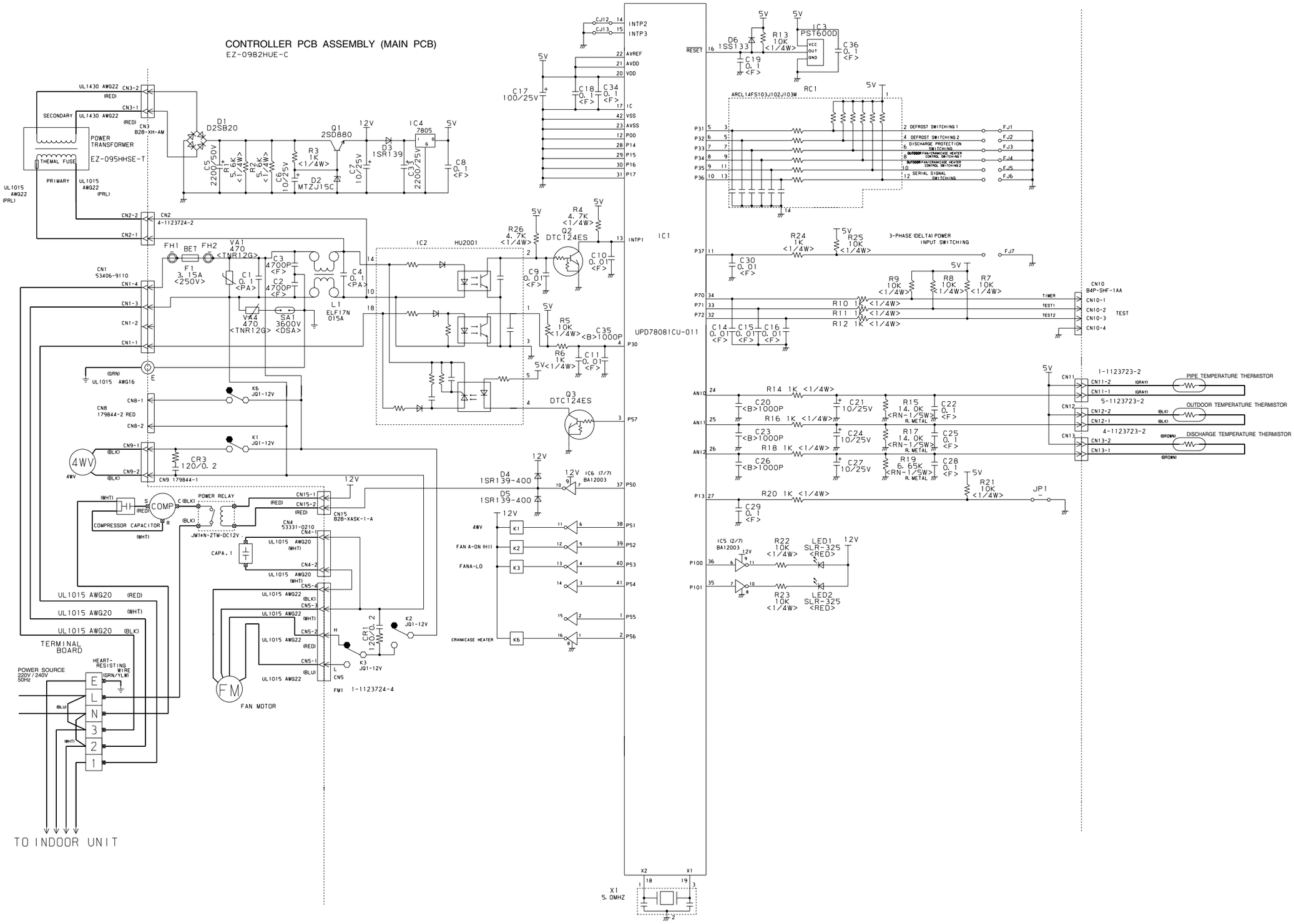

DISASSEMBLY ILLUSTRATION

Models : RC-25A
RC-25RA
RC-30A
RC-30RA

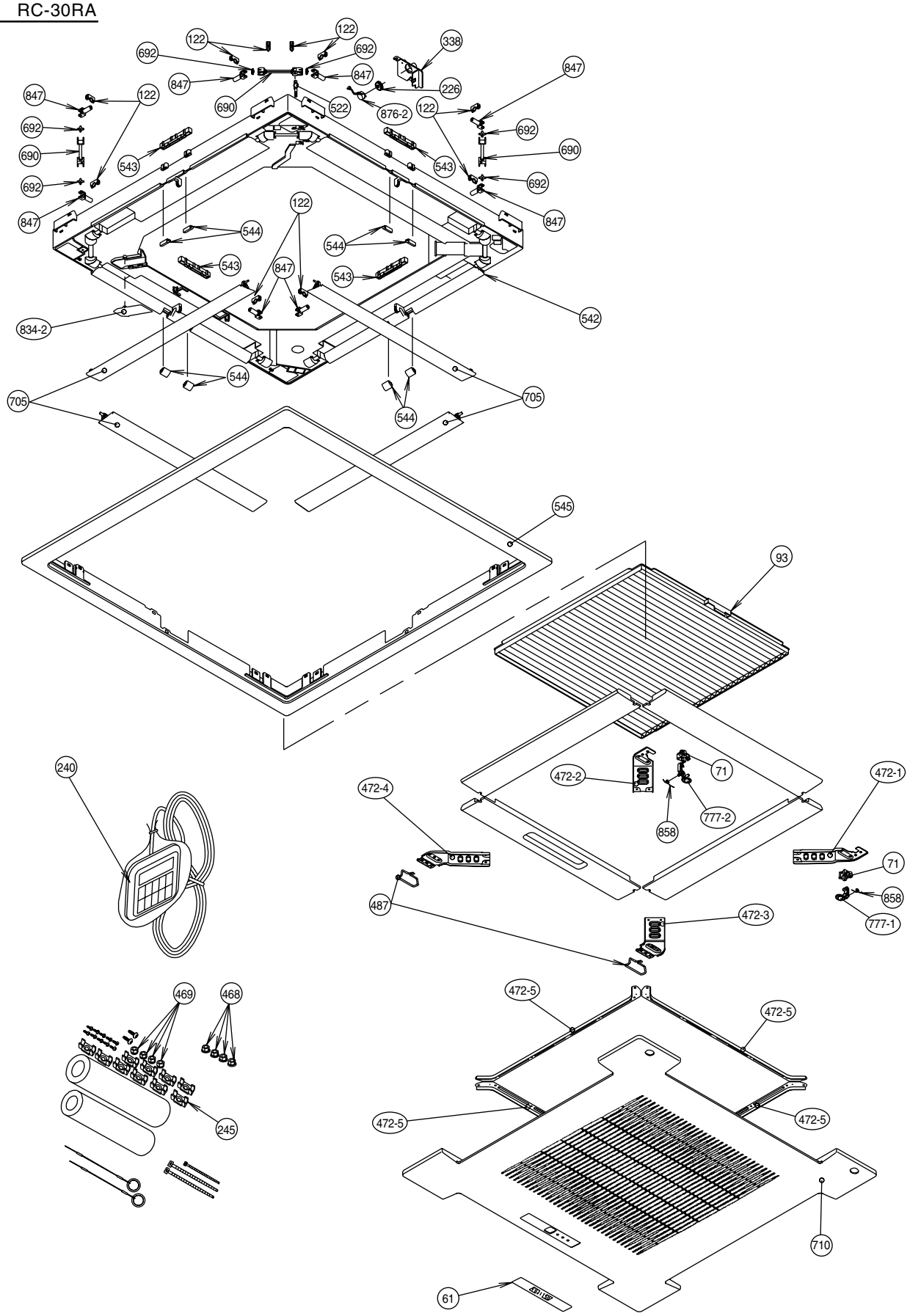

Models : RC-25A
RC-25RA
RC-30A
RC-30RA

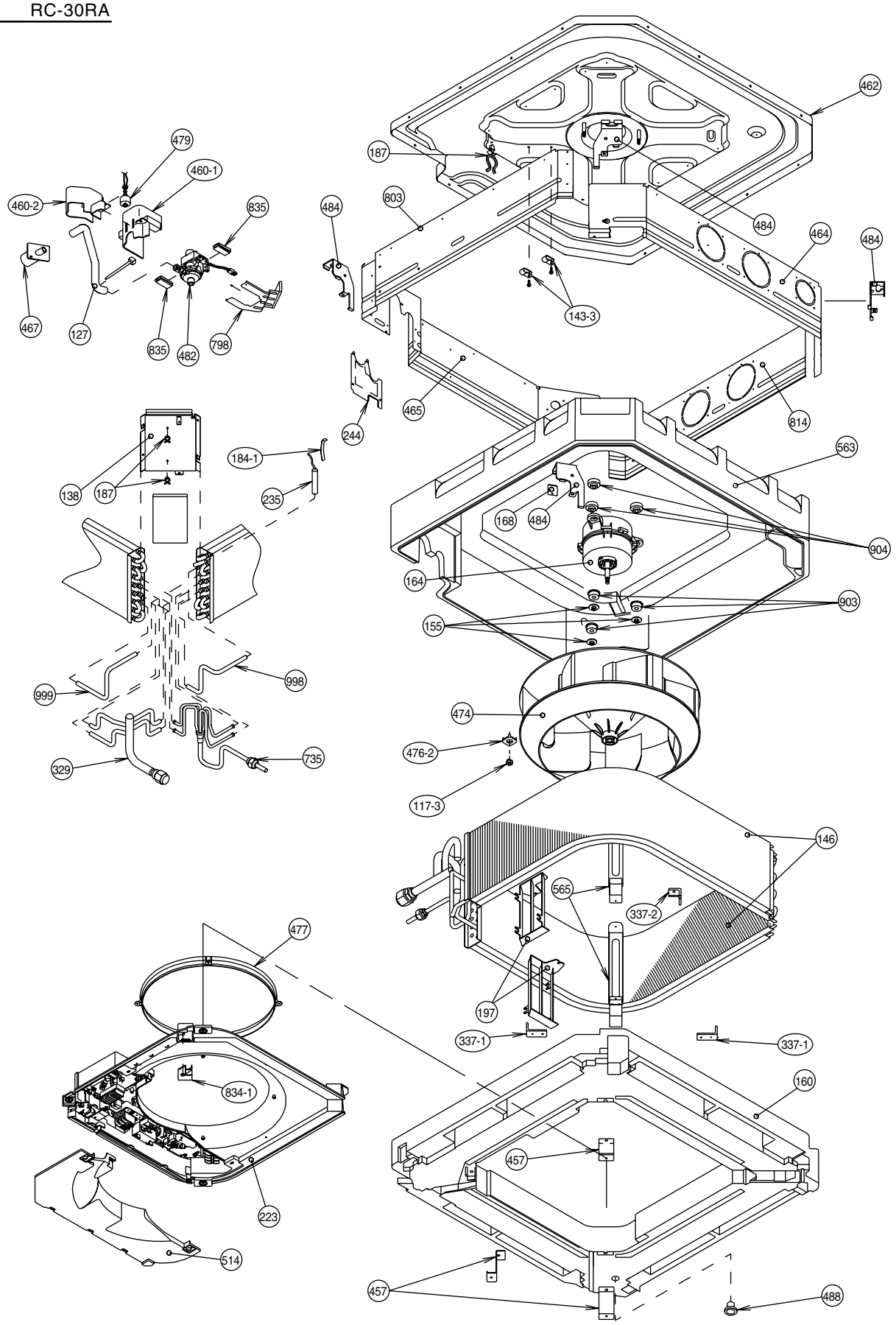

Models : RC-25A
RC-25RA
RC-30A
RC-30RA

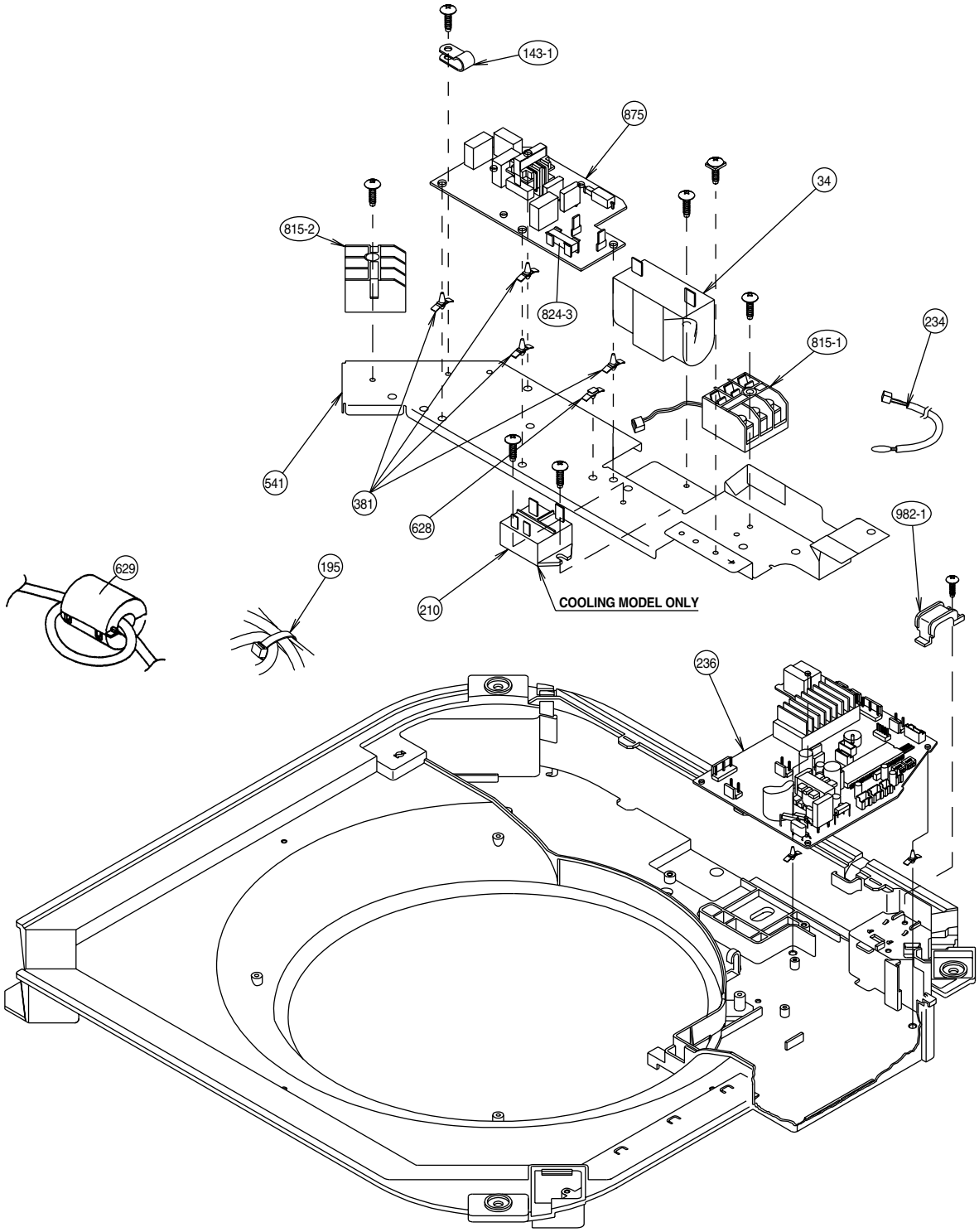

Models : RO-25A
RO-25RA

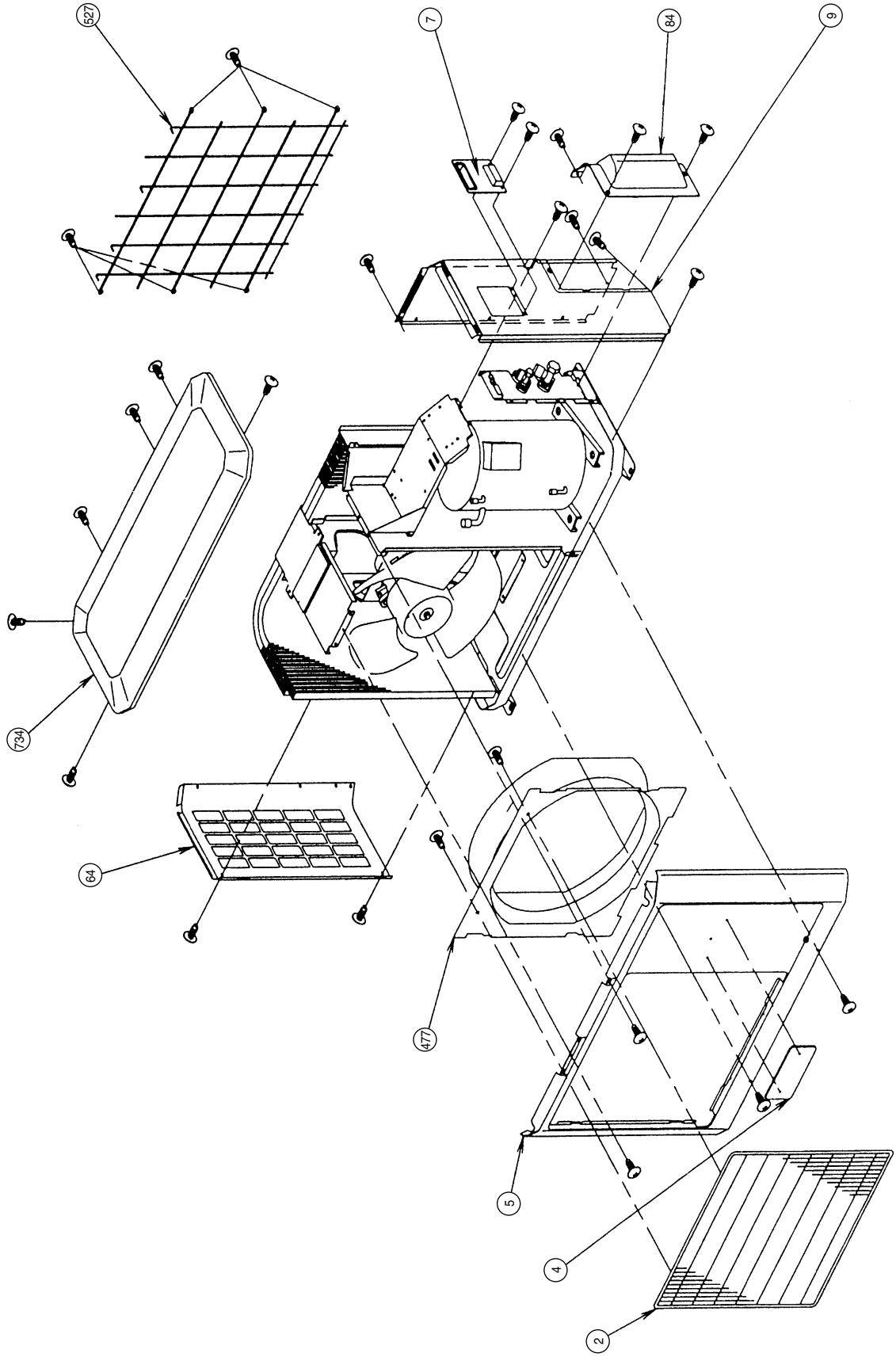

Model : RO-25A

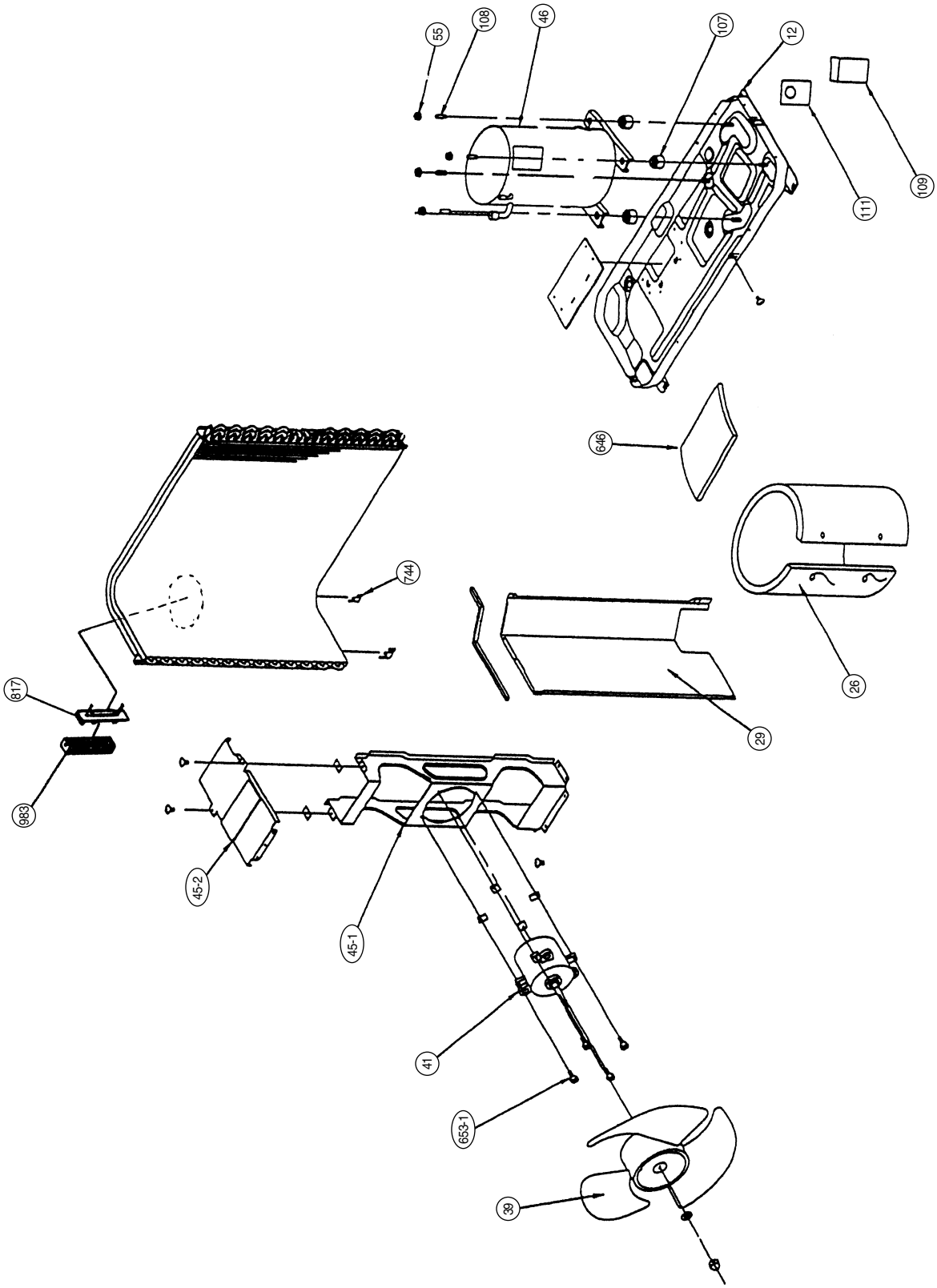

Model : RO-25A

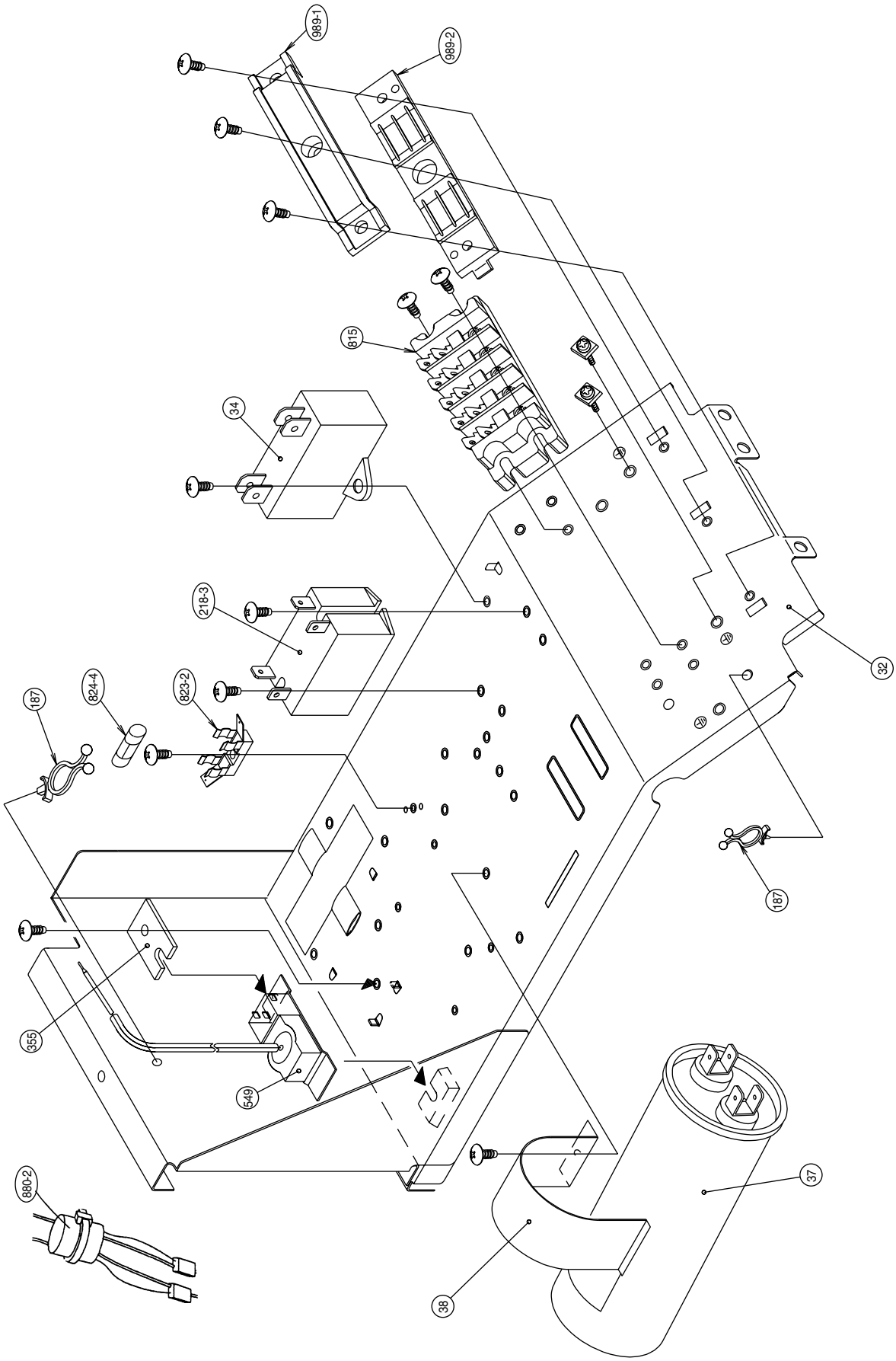

Model : RO-25A

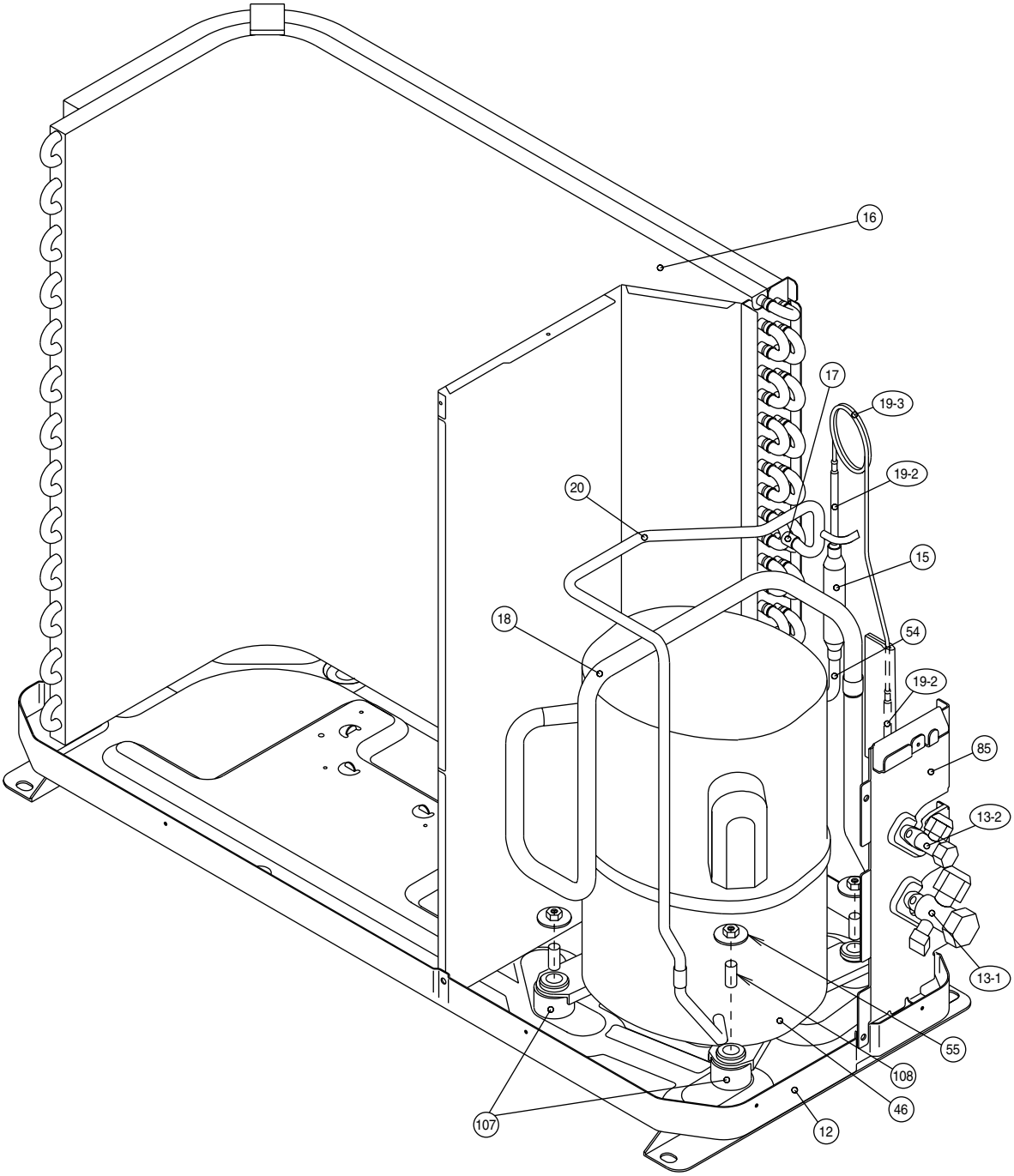

Model : RO-25RA

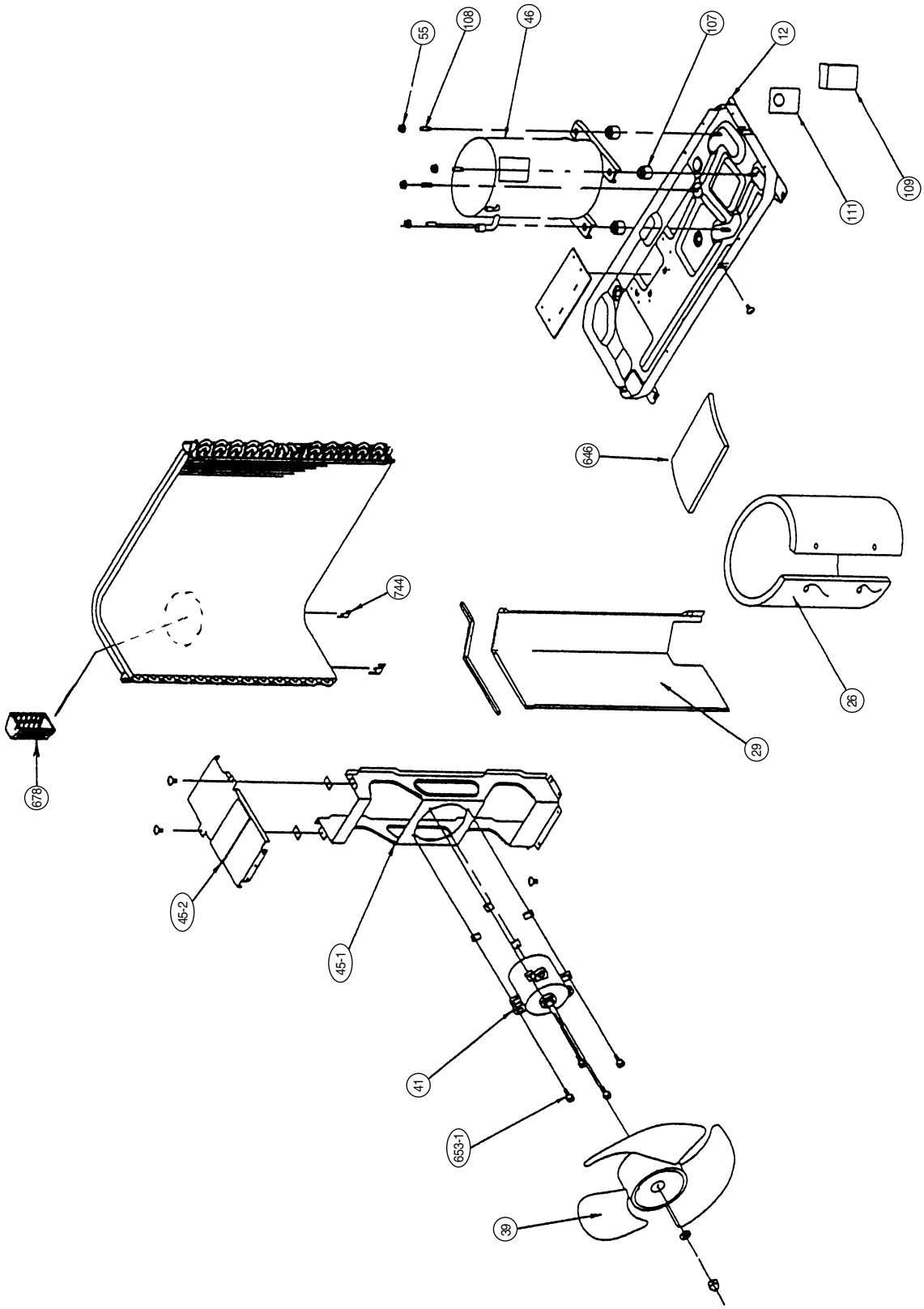

Model : RO-25RA

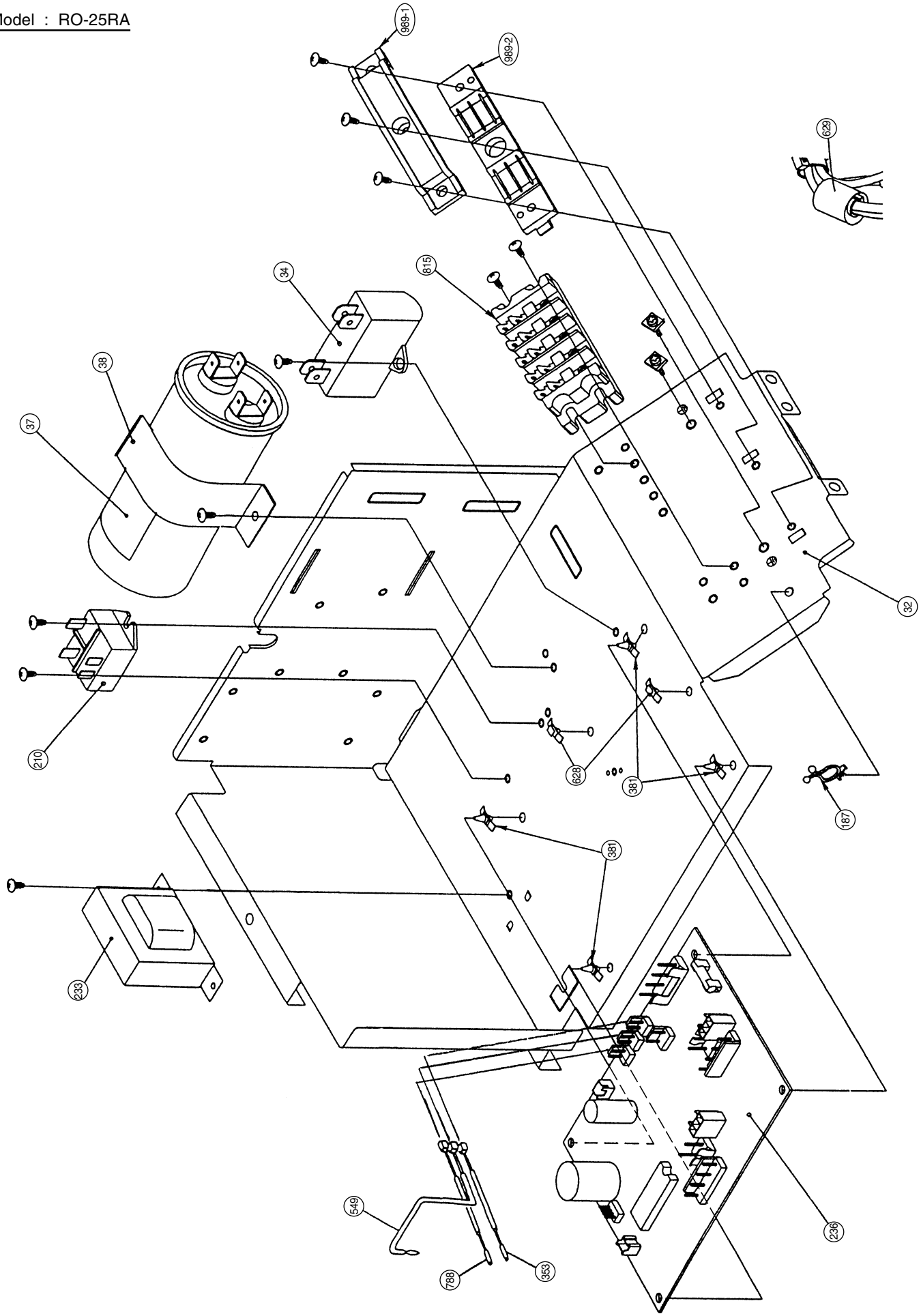

Model : RO-25RA

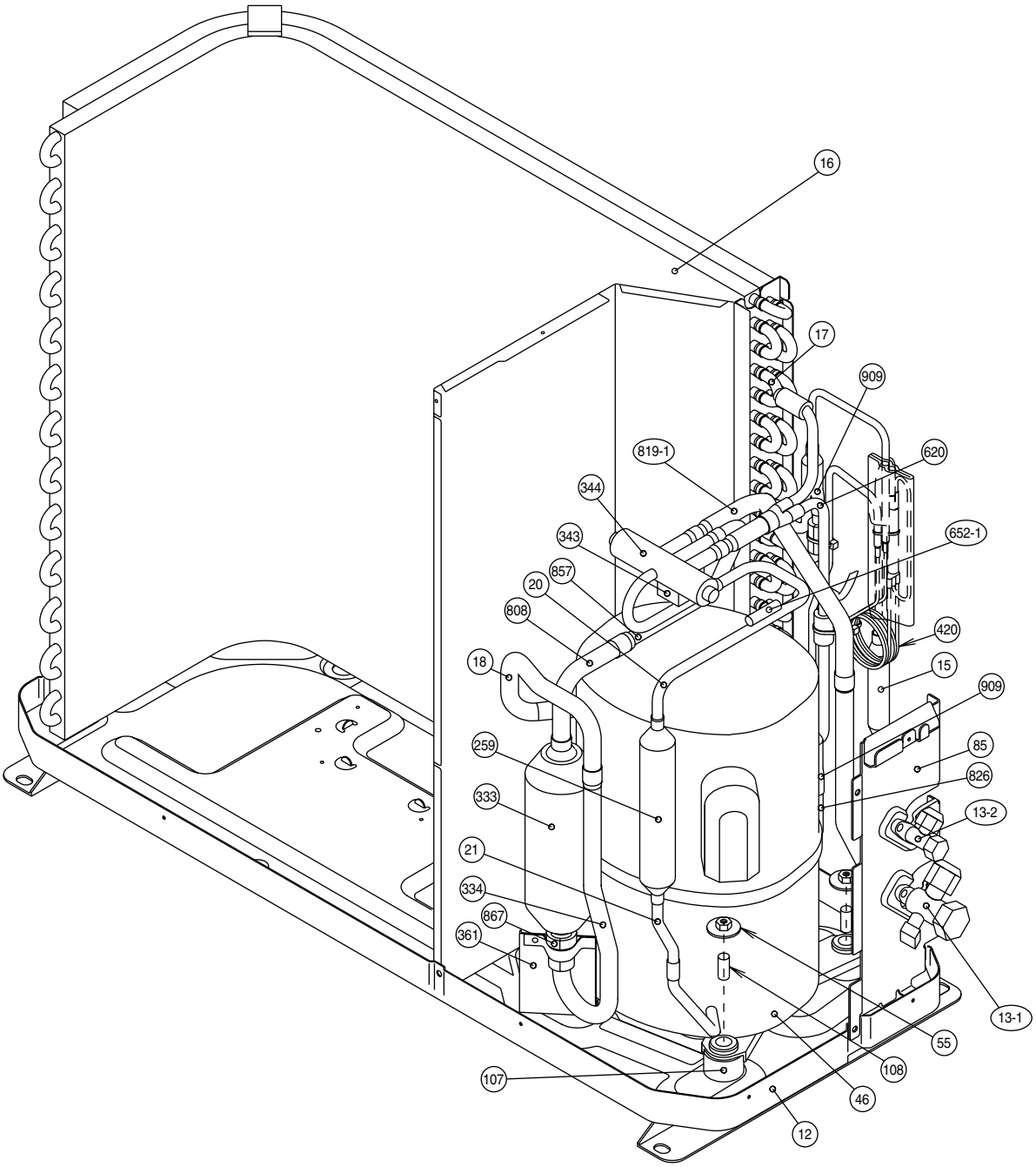

Models : RO-30A
RO-30RA

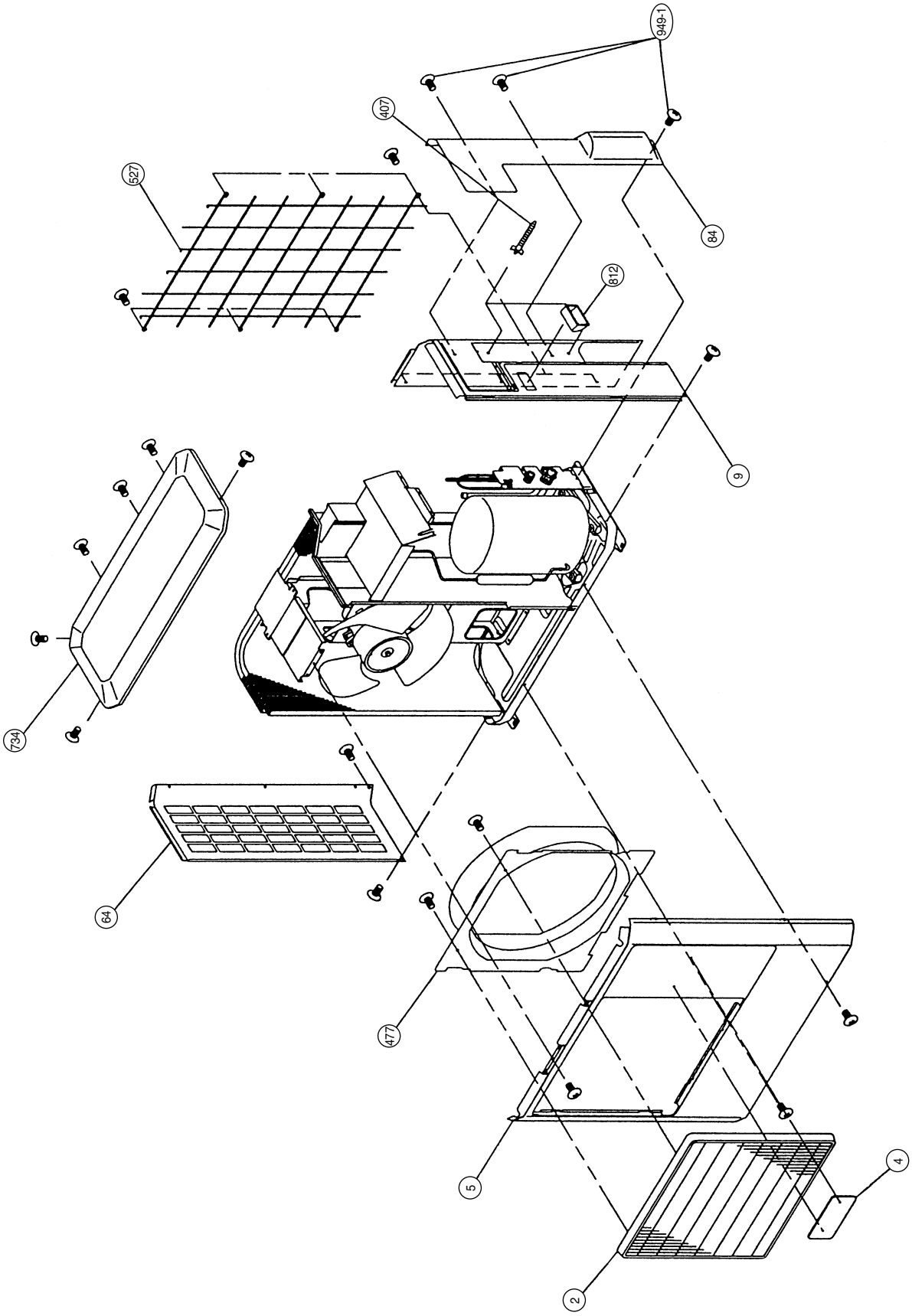

Model : RO-30A

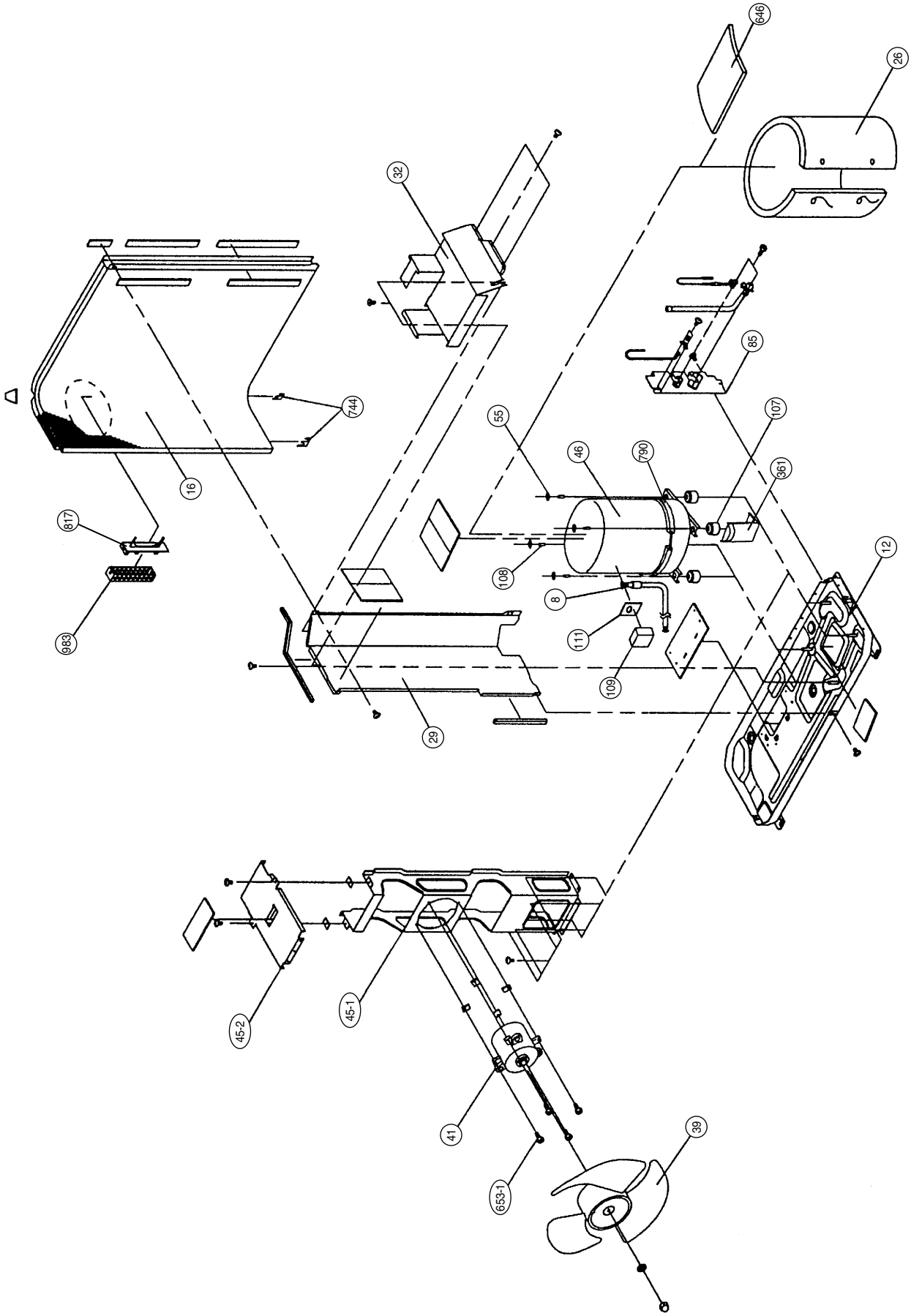
646
26
32
85
744
107
55
46
790
361
16
817
12
108
8
111
983
109
29
45-2
45-1
41
39
653-1

Model : RO-30A

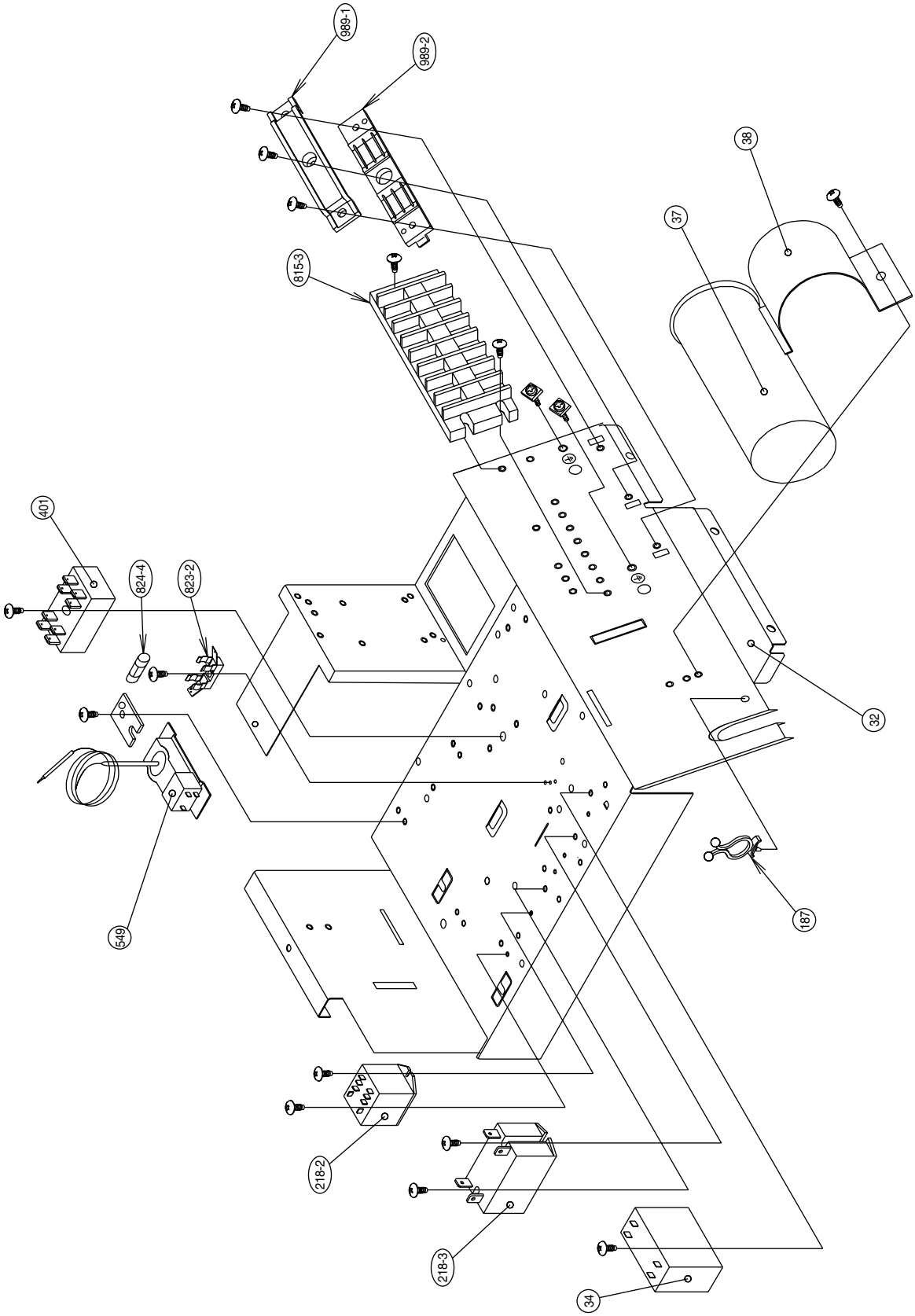

Model : RO-30A

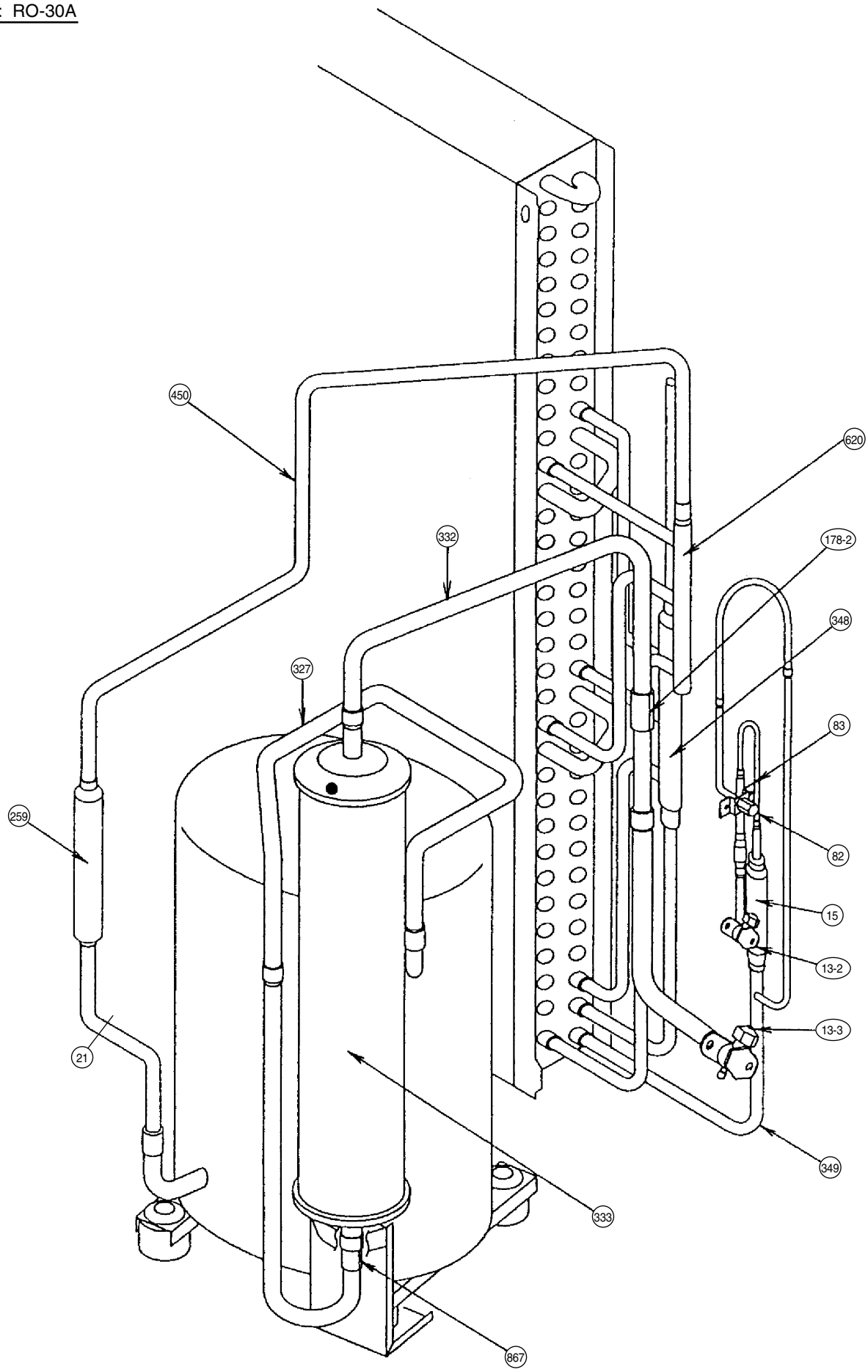

Model : RO-30RA

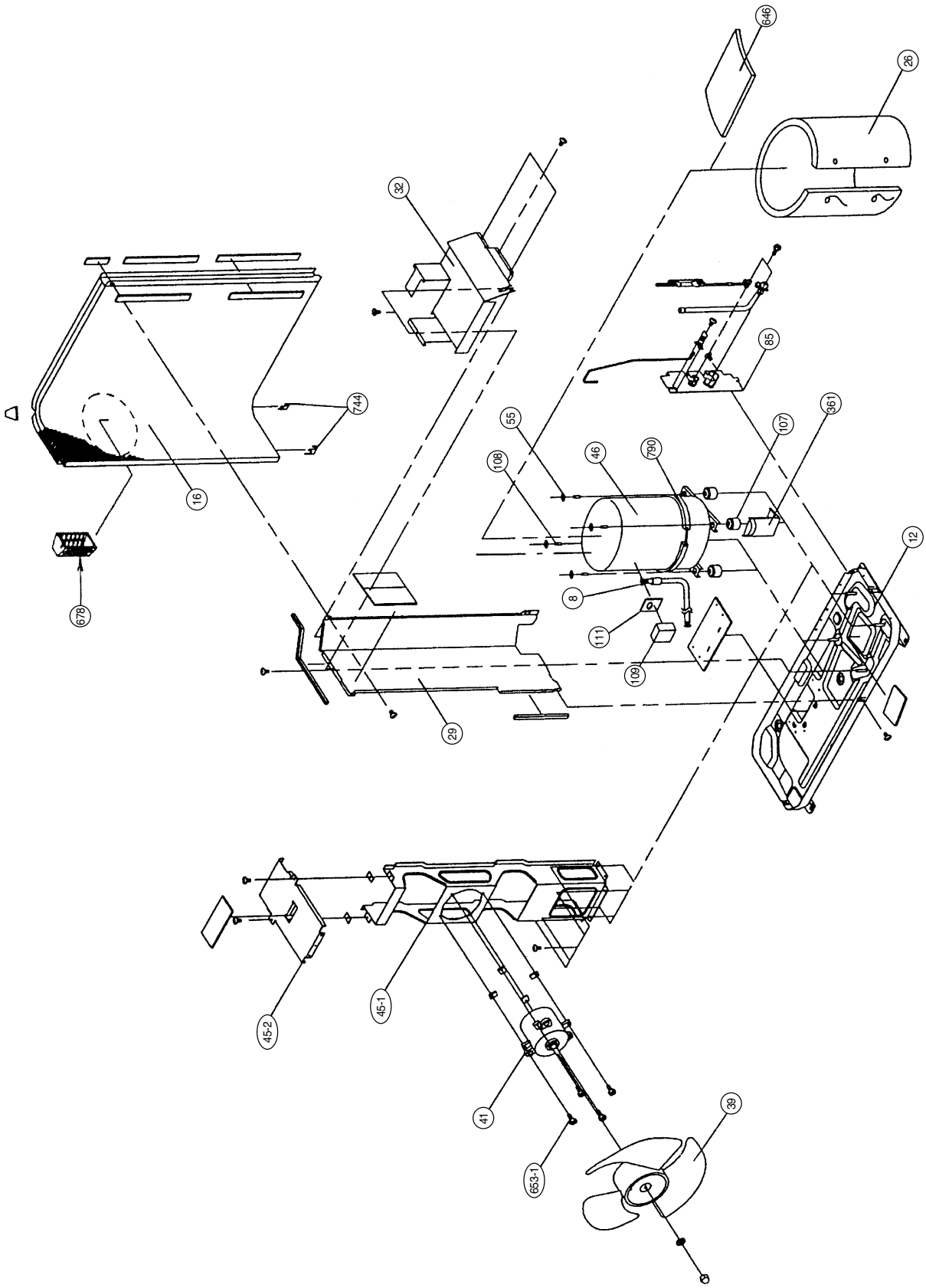

Model : RO-30RA

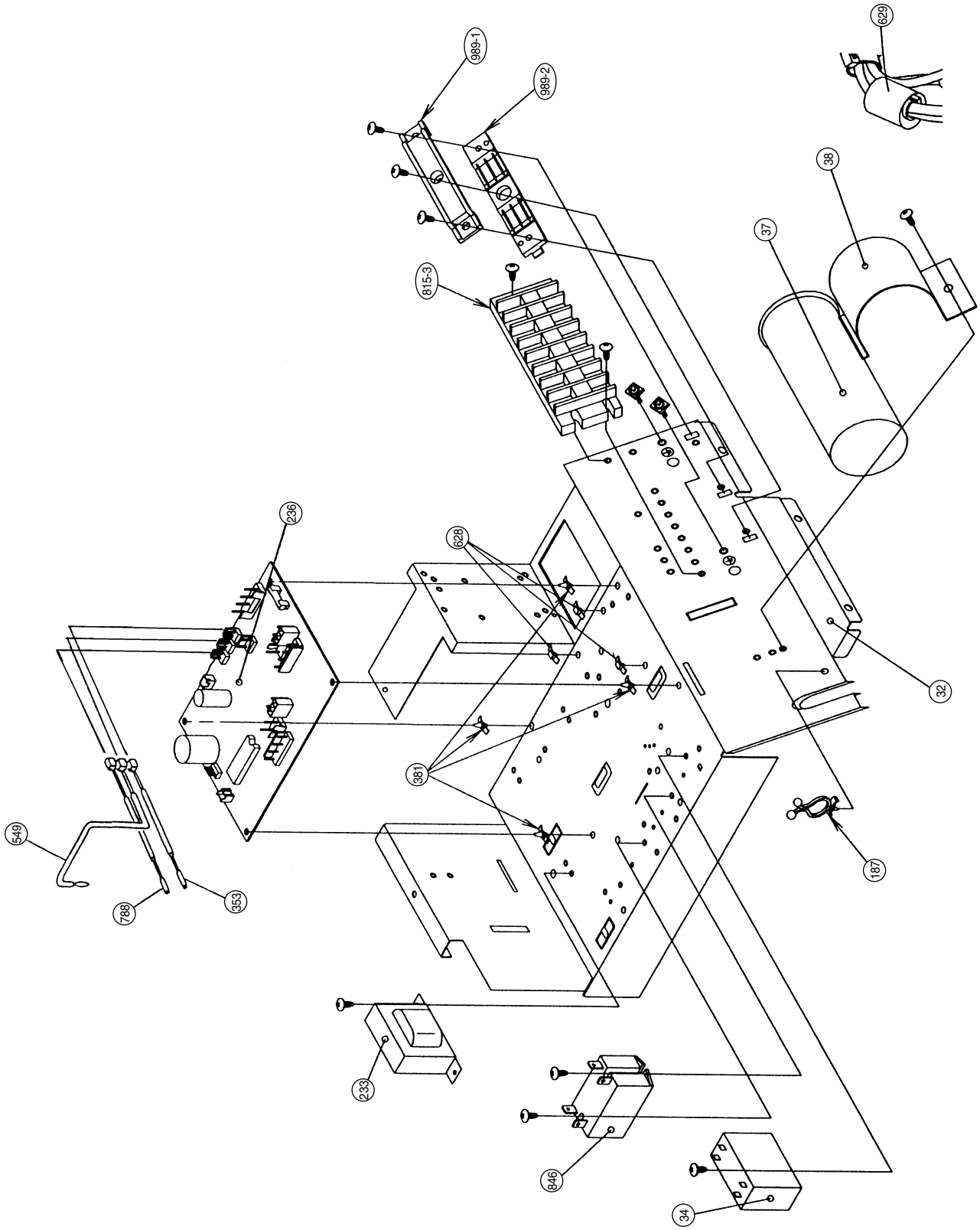

Model : RO-30RA

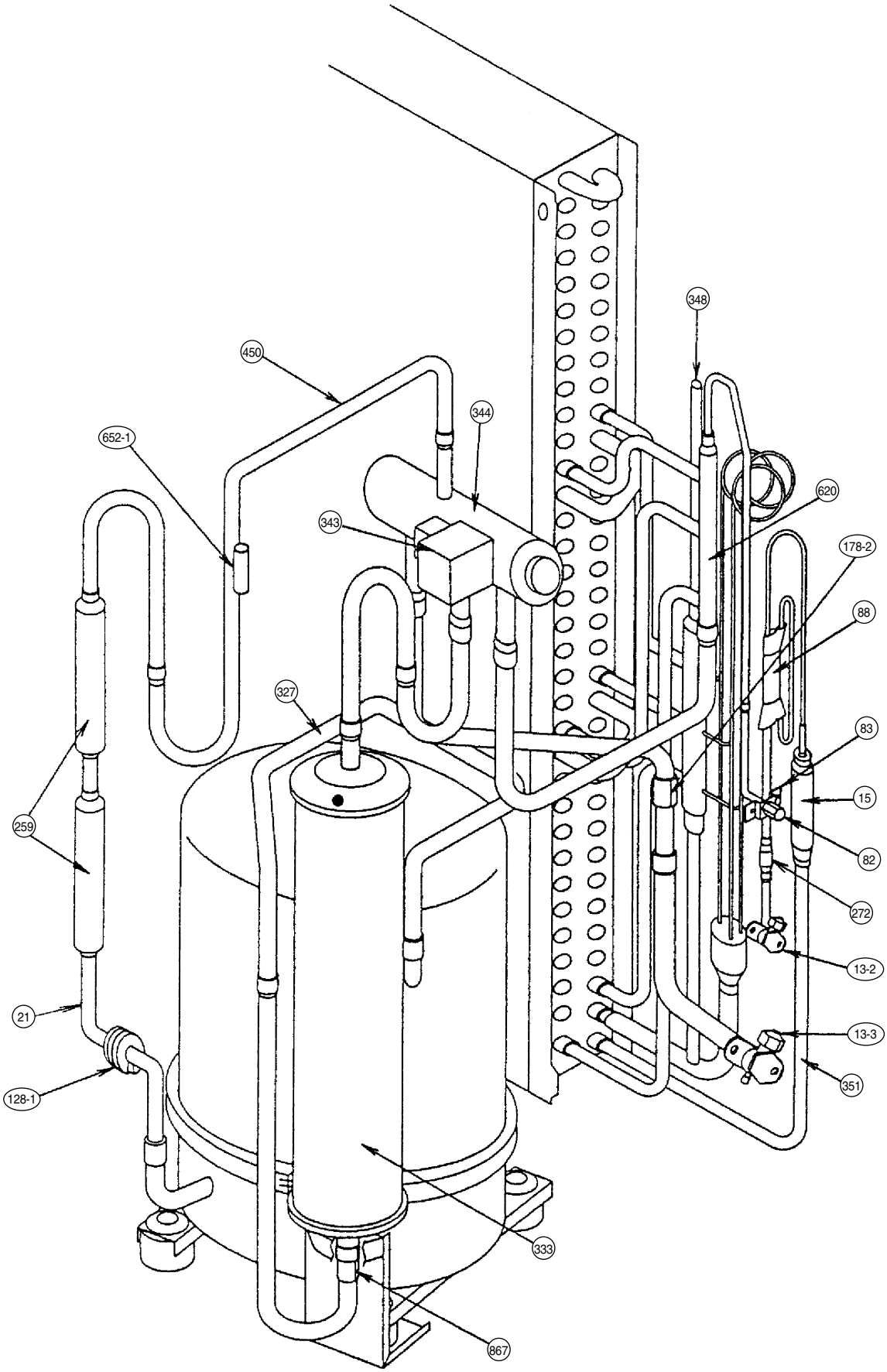

PARTS LIST

When you order parts, please make a photocopy of this page and fill the number of the parts in the "Order" column.

INDOOR UNIT

Ref. No.	Description	Part No.				Ord. Q'ty
		RC-25A	RC-25RA	RC-30A	RC-30RA	
34	Capacitor (Fan Motor)	9703306068	9703306068	9703306068	9703306068	
61	Decoration Plate	9363133004	9363133004	9363133004	9363133004	
71	Grille Hook Holder	9362782005	9362782005	9362782005	9362782005	
93	Filter	9362766005	9362766005	9362766005	9362766005	
117-3	Hex. Nut w/Spring Washer	301721180114	301721180114	301721180114	301721180114	
122	Louver Support Holder	9362799003	9362799003	9362799003	9362799003	
127	Drain Hose	9365074008	9365074008	9365074008	9365074008	
138	Separate Wall	9362793001	9362793001	9362793001	9362793001	
143-1	Clamp NK-3N	313361274700	313361274700	313361274700	313361274700	
143-3	Clamp NK-6N	9305657001	9305657001	9305657001	9305657001	
146	Evaporator Assy	9365376003	9365376003	9366300007	9366300007	
155	Special Nut M6	9307615016	9307615016	9307615016	9307615016	
160	Drain Pan Assy	9362804004	9362804004	9362804004	9362804004	
164	Fan Motor Assy-In	9601092018	9601092018	9601092018	9601092018	
168	Cabinet-E	9362735001	9362735001	9362735001	9362735001	
184-1	Thermostat Spring-A	313728262708	313728262708	313728262708	313728262708	
187	Clamp No.1219	313361271706	313361271706	313361271706	313361271706	
195	Clamp SKB-100	313361275805	313361275805	313361275805	313361275805	
197	Wind Guide Board	9363117004	9363117004	9363117004	9363117004	
210	Main Relay	9356781007	———	9356781007	———	
223	Control Box	9362762007	9362762007	9362762007	9362762007	
226	Motor Gear	9362764001	9362764001	9362764001	9362764001	
234	Thermistor Assy-Room	9703299025	9703299025	9703299025	9703299025	
235	Thermistor Assy-Pipe	9703297014	9703297014	9703297014	9703297014	
236	Controller PCB Assy	9703595028	9703595011	9703595042	9703595035	
240	Remote Control Unit	9703173028	9703173011	9703173028	9703173011	
244	Pipe Cover	9362748001	9362748001	9362748001	9362748001	
245	Cable Clamp	313714181904	313714181904	313714181904	313714181904	
329	Coupling Pipe Assy	9365354001	9365354001	9365354001	9365354001	
337-1	Reinforcement (Eva.)-A	9362749008	9362749008	9362749008	9362749008	
337-2	Reinforcement (Eva.)-B	9362750004	9362750004	9362750004	9362750004	
338	Motor Holder	9362765008	9362765008	9362765008	9362765008	
381	Locking Spacer	313209391506	313209391506	313209391506	313209391506	
457	Reinforcement (Drain Pan)	9362757003	9362757003	9362757003	9362757003	
460-1	Pump Cover-A	9362775007	9362775007	9362775007	9362775007	
460-2	Pump Cover-B	9362776004	9362776004	9362776004	9362776004	
462	Top Cover Plate Assy	9362806022	9362806022	9362806022	9362806022	
464	Cabinet-A Assy	9362807012	9362807012	9362807012	9362807012	
465	Cabinet-B Assy	9362808019	9362808019	9362808019	9362808019	
467	Drain Port	9362786003	9362786003	9362786003	9362786003	
468	Special Nut-A (Large)	313005446653	313005446653	313005446653	313005446653	
469	Special Nut-B (Small)	313005446759	313005446759	313005446759	313005446759	
472-1	Grille Reinforcement-A	9362738002	9362738002	9362738002	9362738002	
472-2	Grille Reinforcement-B	9362739009	9362739009	9362739009	9362739009	
472-3	Grille Reinforcement-C	9362740005	9362740005	9362740005	9362740005	
472-4	Grille Reinforcement-D	9362741002	9362741002	9362741002	9362741002	
472-5	Grille Reinforcement-E	9362742009	9362742009	9362742009	9362742009	
474	Turbo Fan Assy	9362810012	9362810012	9362810012	9362810012	
476-2	Special Washer	9362756006	9362756006	9362756006	9362756006	
477	Bellmouth (B)	9362774000	9362774000	9362774000	9362774000	

When you order parts, please make a photocopy of this page and fill the number of the parts in the "Order" column.

INDOOR UNIT (Continued)

Ref. No.	Description	Part No.				Ord. Q'ty
		RC-25A	RC-25RA	RC-30A	RC-30RA	
479	Float Switch	9703285004	9703285004	9703285004	9703285004	
482	Pump Unit	9703125010	9703125010	9703125010	9703125010	
484	Hook	9362736008	9362736008	9362736008	9362736008	
487	Grille Hinge Wire	9362754002	9362754002	9362754002	9362754002	
488	Drain Pan Plug	313005174654	313005174654	313005174654	313005174654	
514	Control Box Cover	9362763004	9362763004	9362763004	9362763004	
522	Joint Gear	9362772006	9362772006	9362772006	9362772006	
541	Terminal Plate	9363642001	9363642001	9363642001	9363642001	
542	Panel Base	9362759014	9362759014	9362759014	9362759014	
543	Panel Frame Holder	9362761017	9362761017	9362761017	9362761017	
544	Panel Base Holder	9362760010	9362760010	9362760010	9362760010	
545	Panel Frame	9362758017	9362758017	9362758017	9362758017	
563	Insulation (Inner Box)	9362797009	9362797009	9362797009	9362797009	
565	Evaporator Holder Assy	9362802024	9362802024	9362802024	9362802024	
628	Locking Spacer-B	313005446558	313005446558	313005446558	313005446558	
629	EMI Filter	0400056133	0400056133	0400056133	0400056133	
690	Joint-A	9362773003	9362773003	9362773003	9362773003	
692	Joint Shaft	9362771009	9362771009	9362771009	9362771009	
705	Louver	9362769013	9362769013	9362769013	9362769013	
710	Intake Grille-B	9362854016	9362854016	9362854016	9362854016	
735	Distributor Assy	9365353004	9365353004	9365353004	9365353004	
777-1	Grille Hook-A	9362779012	9362779012	9362779012	9362779012	
777-2	Grille Hook-B	9362778015	9362778015	9362778015	9362778015	
798	Pump Hook Bracket	9362753005	9362753005	9362753005	9362753005	
803	Cabinet-D	9362792004	9362792004	9362792004	9362792004	
814	Cabinet-C	9362791007	9362791007	9362791007	9362791007	
815-1	Terminal-3P	9306489069	9306489069	9306489069	9306489069	
815-2	Terminal-3P	9703345012	9703345012	9703345012	9703345012	
824-3	Fuse	0600285210	0600285210	0600285210	0600285210	
834-1	Wire Cover-A	9362789004	9362789004	9362789004	9362789004	
834-2	Wire Cover-B	9362788007	9362788007	9362788007	9362788007	
835	Cushion Rubber(Pump)	9362777001	9362777001	9362777001	9362777001	
847	Louver Supporter	9362770019	9362770019	9362770019	9362770019	
858	Grille Spring	9362755009	9362755009	9362755009	9362755009	
875	Filter PCB Assy	9703683015	9703649011	9703683015	9703649011	
876-2	Step Motor	9360307019	9360307019	9360307019	9360307019	
903	Rubber (Vibration-proof) A	9364891002	9364891002	9364891002	9364891002	
904	Rubber (Vibration-proof) B	9364892009	9364892009	9364892009	9364892009	
982-1	Cord Clamp	9356857009	9356857009	9356857009	9356857009	
998	Bypass Pipe-A	9365360002	9365360002	9365360002	9365360002	
999	Bypass Pipe-B	9365361009	9365361009	9365361009	9365361009	

OUTDOOR UNIT

When you order parts, please make a photocopy of this page and fill the number of the parts in the "Order" column.

Ref. No.	Description	Part No.				Ord. Q'ty
		RO-25A	RO-25RA	RO-30A	RO-30RA	
2	Fan Cover (Guard)	9359808015	9359808015	9359808015	9359808015	
4	Emblem-Rear	9361328006	9361328006	9361328006	9361328006	
5	Cabinet-A, Painted	9359797043	9359797043	9359797029	9359797029	
7	Connector Cover	9358011010	9358011010	———	———	
8	Wire Assy (Shield)-D	———	———	9359904021	9359904021	
9	Cabinet-B, Painted	9361323025	9361323025	9359798026	9359798026	
12	Base Assy, Painted	9359812029	9359812029	9359812029	9359812029	
13-1	Packed Valve (5/8A)	9365096000	9365096000	———	———	
13-2	Packed Valve (3/8)	9360150004	9360150004	9360150004	9360150004	
13-3	3-Way Valve (5/8)	———	———	9360157003	9360157003	
15	Dryer	9353789006	9353789006	9353789006	9353789006	
16	Condenser Assy	9365636008	9365438008	9360280015	9360280015	
17	"U" Pipe-Y	9305523009	9305523009	———	———	
18	Suction Pipe	9365610008	9365409008	———	———	
19-2	Joint Pipe (Capillary)	9365621004	———	———	———	
19-3	Capillary Tube	9365622001	———	———	———	
20	Discharge Pipe Assy	9365618004	9365419007	———	———	
21	Discharge Pipe-B	———	9365412008	9360156006	9360156006	
26	Compressor Cover-A	9365426005	9365426005	9362501002	9362501002	
29	Separate Wall	9359805014	9359805014	9359804017	9359804017	
32	Control Box Metal	———	———	9359839019	9359839019	
32	Control Box Metal-A	9361409026	———	———	———	
32	Control Box Assy	———	9365086001	———	———	
34	Capacitor (Fan Motor)	9357965024	9703306051	9357965024	9700467052	
37	Running Capacitor	9703107016	9703107016	9703107078	9703107078	
38	Capacitor Clamp	9351770013	9365088005	9360610010	9360610010	
39	Propeller Fan	9359837015	9359837015	9359837015	9359837015	
41	Fan Motor Assy-Out	9600832011	9600832011	9600832011	9600832011	
45-1	Motor Bracket Metal	9359802013	9359802013	9359801016	9359801016	
45-2	Motor Bracket-Top Metal	9359803010	9359803010	9369803010	9359803010	
46	Compressor Assy	9360509017	9360509017	9360613011	9360613011	
54	Condensing Pipe	9365620007	———	———	———	
55	Special Nut M8 (For Comp.)	313252257701	313252257701	313252257701	31325257701	
64	Cabinet Left	9359840046	9359840046	9359840022	9359840022	
82	Check Joint Assy	———	———	9360762009	9360771001	
83	Check Joint Bracket Metal	———	———	9359807018	9359807018	
84	Valve Cover	9361325012	9361325012	9359817017	9359817017	
85	Valve Fixing Plate Metal	9361324015	9361324015	9359806011	9359806011	
88	Restrictor Valve	———	———	———	9360146007	
107	Rubber Seat-A (For Comp.)	313093081402	313093081402	313102081406	313102081406	
108	Sleeve-A (For Comp.)	313093081706	313093081706	313696081700	313696081700	
109	Terminal Cover (For Comp.)	313202059600	313202059600	9352456022	9352456022	
111	Terminal Packing (For Comp.)	313202059807	313202059807	9352456039	9352456039	
128-1	Rubber (Discharge Pipe)	———	———	———	313155086308	
178-2	Capillary Holder Rubber	———	———	313394274808	313394274808	
187	Clamp No.1219	313361271706	313361271706	313361271706	313361271706	
210	Main Relay	———	9356781007	———	———	
218-2	Power Relay	———	———	9351553012	———	
218-3	Power Relay	9704171016	———	9353619006	———	
233	Power Transformer	———	9701549016	———	9701549016	
236	Controller PCB Assy	———	9701936014	———	9702834012	
259	Muffler	———	313755083903	313755083903	313755083903	
272	Strainer	———	———	———	9360147011	
327	Suction Pipe-A	———	———	9360152008	9360152008	
332	Suction Pipe-E	———	———	9361052000	———	
333	Accumulator	———	313986117201	9366439004	9366439004	
334	Suction Pipe-B	———	9365411001	———	———	
343	Solenoid Coil	———	9359616108	———	9360538024	
344	4-Way Valve	———	9300604017	———	9360195005	
348	Outlet Pipe (Cond.) Assy	———	———	9360171009	9360131003	

OUTDOOR UNIT (Continued)

When you order parts, please make a photocopy of this page and fill the number of the parts in the "Order" column.

Ref. No.	Description	Part No.				Ord. Q'ty
		RO-25A	RO-25RA	RO-30A	RO-30RA	
349	Outlet Pipe-E	———	———	9360174000	———	
351	Outlet Pipe-F	———	———	———	9360158000	
353	Thermistor Assy-Pipe	———	9701330010	———	9701330010	
355	Switch Bracket	313986353607	———	———	———	
361	Accumulator Support Assy	———	313986353804	———	———	
381	Locking Spacer	———	313209391506	———	313209391506	
401	Terminal-2P	———	———	9701971015	———	
407	Clamp (Cable) No.1259	———	———	313739340109	313739340109	
420	Capillary Assy	———	9365421000	———	———	
450	Discharge Pipe-A	———	———	9360166005	9360124005	
477	Bellmouth	9359809012	9359809012	9359809012	9359809012	
527	Protection Net	9359845010	9359845010	9359844013	9359844013	
549	Thermostat-Outdoor	9352553004	9357328027	9353680006	9357328027	
620	Inlet Pipe (Cond.) Assy	———	9365413005	9360167002	9360126009	
628	Locking Spacer-B	———	313005446558	———	313005446558	
629	EMI Filter	———	0400056133	———	0400056133	
646	Compressor Cover-B	313986355101	313986355101	9353368003	9353368003	
652-1	Thermistor Holder Pipe	———	313806262805	———	313806262805	
653-1	Bolt (Fan Motor Fixing)	0700156014	0700156014	0700156014	0700156014	
678	Bracket (Thermistor)	———	313557406106	———	313557406106	
734	Cabinet Top Plate	9359799023	9359799023	9359799023	9359799023	
744	Clamp (Condenser)	313166374106	313166374106	313166374106	313166374106	
788	Thermistor-Discharge	———	9358337028	———	9358337011	
790	Belt Heater	———	———	9361140035	9361140035	
808	Inlet Pipe (Accumulator)	———	9365410004	———	———	
812	Grip	———	———	9352157004	9352157004	
815	Terminal-5P	9356497021	9356497021	———	———	
815-3	Terminal-8P	———	———	9358660119	9358660119	
817	Thermostat Fixture	9352164019	———	9352164019	———	
819-1	Joint Pipe (Valve)	———	9365418000	———	———	
823-2	Fuse Holder	0500063024	———	0500063024	———	
824-4	Fuse	0600222529	———	0600222529	———	
826	Condensing Pipe-B	———	9365408001	———	———	
846	Power Relay	———	———	———	9357058009	
857	Inlet Pipe (Accumulator)-B	———	9365417003	———	———	
867	Accumulator Holder Rubber	———	9354022010	9354022010	9354022010	
880-2	Network	9701020010	———	———	———	
909	Strainer-A	———	9365112014	———	———	
949-1	Screw, Painted White	———	———	9305648009	9305648009	
983	Thermostat Cover	9358274002	———	9358274002	———	
989-1	Cord Clamp-A	9359822011	9359822011	9359822011	9359822011	
989-2	Cord Clamp-B	9359823018	9359823018	9359823018	9359823018	

When you order parts, please make a photocopy of this page and fill the number of the parts in the "Order" column.

[INDOOR UNIT]

CONTROLLER PCB ASSEMBLY (Ref. No.236)

( ) : Reverse cycle model

Ref. No.	Description	Part No.	Ord. Q'ty
IC1	IC uPD 78014HCW-029	9703639012	
IC2	IC NJM 7812FA	0100462104	
IC3	IC NJM 7805FA	0100462081	
IC4-6	IC uPA 2003GRE2	0100028041	
IC7	IC BR 93LC46RF-E2	0100295016	
IC8	IC PST 600CMTR	0101461120	
IC9	IC TLP 621(D4)-GB	0000117074	
(IC10)	IC HI2002	9701384020	
IC11	IC BA 10358FE2	0101846071	
IC13	IC G3WA-201PL	9703248016	
IC14	IC BA 10393FT2	0101269023	
IC15	IC PS2561-1-VL	0000050456	
Q1	Xstr 2SC4236	0000164047	
Q2	Xstr 2SC1815	0000002011	
Q3,4	Xstr DTC124EKA	0000936033	
Q5,6,9,10	Xstr 2SC2712	0000781053	
Q8	Xstr UPA609T	0000820035	
D1	Diode D3SB60	0000689045	
D2,4,7	Diode D1FL20U	0000746519	
D3	Diode MTZJ5.1B	0000852166	
D5	Diode 1SR139-600	0000353120	
D6	Diode D2FL20U	0000906500	
D8,14	Diode D1F60	0000208024	
D9,10	Diode DA226U	0000625036	
D12,17	Diode DAN202K	0000684019	
D15	Diode MTZJ11B	0000853095	
D16	Diode MTZJ7.5B	0000852012	
R1	Res. Cement 5W 3.3ohm+-10%	0200153148	
R2	Res. Metal Oxide 2W 1.5ohm+-5%	0201107119	
R3	Res. 1/10W 100ohm+-5%	0200212500	
R4	Res. Metal Film 2W 330kohm+-5%	0200357133	
R5	Res. Metal Oxide 2W 62kohm+-5%	0201107997	
R6	Res. 1/2W 100ohm+-5%	0200731506	
R7	Res. 1/4W 330ohm+-5%	0200708621	
R8,10,13,15-17 21-24,29-32,37,39, 48,50,52,55,59,60, 61,66,68,70	Res. 1/10W 10kohm+-5%	0200213019	
R9,47,65	Res. 1/10W 390ohm+-5%	0200212647	
R12,18-20,25-28, 33-36,38,42,44,46, 49,51,58,67,69,73	Res. 1/10W 1kohm+-5%	0200212746	
R11	Res. Metal Oxide 1W 560kohm+-5%	0201106662	
R40,41,62,71,72,79	Res. 1/10W 4.7kohm+-5%	0200212906	
R43	Res. 1/10W 10kohm+-1%	0200279497	
R45	Res. 1/10W 49.9kohm+-1%	0200279824	
R63	Res. 1/10W 15.4kohm+-1%	0200279565	
R64	Res. 1/10W 28kohm+-1%	0201114445	
R75,76	Res. Metal Oxide 2W 22kohm+-5%	0201107614	
R77	Res. 1/4W 470ohm+-5%	0200708669	
R80	Res. 1/10W 33ohm+-5%	0200212388	
R81,87	Res. 1/10W 33kohm+-1%	0200279732	
R82	Res. 1/10W 5.6kohm+-1%	0200279374	
R83	Res. 1/10W 3.9kohm+-1%	0200279299	
R84	Res. 1/10W 15kohm+-1%	0200279572	
R85	Res. 1/10W 3.3kohm+-1%	0200279251	
R86	Res. 1/10W 39kohm+-5%	0200213156	
R88	Res. 1/10W 22kohm+-1%	0200279657	
R89	Res. 1/4W 1kohm+-5%	0200708744	
R90	Res. 1/10W 47kohm+-5%	0200213170	
R91	Res. 1/10W 2.2kohm+-5%	0200212821	
CJ1	Res. 0 ohm	0200212012	
C1,2	Cap. Plastic 0.022mfd	0301052098	
C4	Cap. Ceramic 250V 470pF	0301102649	
C5	Cap. Elec. 450V 100mfd	0300256060	
C6	Cap. Plastic 4700pF	0300269091	
C7	Cap. Plastic 50V 0.047mfd	0300169339	
C8	Cap. Elec. 25V 100mfd	0301197560	
C9	Cap. Elec. 25V 1000mfd	0301196495	
C10,11,33,36,	Cap. Elec. 25V 10mfd	0301192312	
C12,57	Cap. Elec. 25V 1000mfd	0301158264	
C13,15,34,37,39,44, 45,47,60	Cap. Ceramic 50V 0.1mfd	0300311752	
C14	Cap. Elec. 25V 100mfd	0301192350	
C16-31,38,40,46,49, CJ2,(CJ1)	Cap. Ceramic 50V 0.01mfd	0300311738	
C32,35,50-53	Cap. Ceramic 50V 1000pF	0300308509	
C54	Cap. Ceramic 250V 0.01mfd	0300209127	
C58	Cap. Elec. 25V 220mfd	0301021490	
C61	Cap. Ceramic 50V 4700pF	0300277171	
C62	Cap. Elec. 25V 22mfd	0301192329	
SW1,4	Switch, Slide DSS803	9701392018	
SW2	Switch, Rotary DRS4016-5	9701694013	
CR1	CR Absorber RPEL-121204	9701125012	
X1	Ceramic Resonator EF0EC8384T4	9701261017	
VA(3),4,5	Varistor TNR12G471K	0000038010	
K4	Relay G5N-1A	9701566013	
T1	Switching Transformer ETS28AS118AH	9702727017	
L2-4	EMI Filter EXCEMT103DT	0400406396	
L5	High Frequency Coil LQH3C470K34T1	0400201298	
(CN1)	Plug, PCB 5-1123724-3	0501321635	
CN1	Plug, PCB 5-1123724-2	0501321574	
CN3	Plug, PCB 53406-9910	0500951048	
CN4	Plug, PCB 2-1123724-2	0501321529	
CN5	Plug, PCB 1-1123724-3	0501321451	
CN6	Plug, PCB 3-1123724-2	0501321536	
CN7	Plug, PCB B2B-XAKK-1-A	0501045227	
CN8	Plug, PCB B2B-XASK-1-A	0501045012	
CN9	Plug, PCB B5P-SHF-1AA	0500006069	
CN10	Plug, PCB B5B-XASK-1-A	0501045043	
CN12	Plug, PCB B3B-XASK-1-A	0501045029	
CN14	Plug, PCB B4B-XH-AM	0500005314	
CN15	Plug, PCB B3B-XARK-1-A	0501045319	
CN16	Plug, PCB 1-1123723-3	0501321079	
CN17	Plug, PCB B3B-XAKK-1-A	0501045357	
CN21	Plug, PCB 1-1123724-2	0501321512	
JM2,3	Wire 0.6dia. L=10mm	9700025016	
JM9	Res. 0 ohm	0200230016	
E1	Wire w/Terminal L=150 GRN	9702313029	

FILTER PCB ASSEMBLY (Ref. No.875)

Ref. No.	Description	Part No.	Ord. Q'ty
C101,102	Cap. Plastic 1mfd	0300304136	
C105,106	Cap. Plastic 0.022mfd	0301052098	
SA101	Arrester DSA-362MA-05	0600168032	
VA101,VA102	Varistor TNR12G471K	0000038010	
TM101,TM102	Plug Contact 86028	0500536016	
LF101	EMI Filter ELF18D650C	0400410294	
F101	Fuse 2183.15	0600285210	
FH1,FH2	Fuse Holder PFC5000-0502	0500158072	
W103,W104	Wire AWG18 2P	9703251023	
W102,W105	Wire AWG18 2P	9703251030	
E101	Wire w/Terminal L=100 GRN	9702313012	

[OUTDOOR UNIT]
CONTROLLER PCB ASSEMBLY (Ref. No.236)

When you order parts, please make a photocopy of this page and fill the number of the parts in the "Order" column.

Ref. No.	Description	Part No.	Ord. Q'ty	Ref. No.	Description	Part No.	Ord. Q'ty
IC1	IC uPD 78081CU-071	9701721023		HT1	Heat Sink PUG 26-25	9701428014	
IC2	IC HU2001	9701651016		CR1,3	CR Absorber RPEL-121204 -C	9701125012	
IC3	IC PST 600D-2-TP	0101461113		L1	EMI Filter ELF17N015A	0400197119	
IC4	IC NJM 7805FA	0100462081		X1	Ceramic Resonator EF0EC5004T4Z	9701261024	
IC5,6	IC BA 12003	0101650012		VA1,4	Varistor TNR10V471K	0000361224	
Q1	Xstr 2SD880	0000001014		K1-3,6	Relay JQ1-12V	9701316014	
Q2,3	Xstr DTC124ES	0000517010		F1	Fuse BET 3.15A-250V	0600222512	
D1	Diode D2SB20	0000599023		FH1,2	Fuse Holder PFC5000-0502	0500158072	
D2	Diode MTZJ15C	0000852203		LED1,2	LED SLR-325VC	0000813259	
D3-5	Diode 1SR139-400	0000353137		CN1	Plug, PCB 53406-9110	0500951086	
D6	Diode 1SS133	0000572019		CN2	Plug, PCB B2P3-VH-B-R	0500011766	
R1,2	Res. Carbon 1/4W 5.6kohm+-5%	0200994192		CN3	Plug, PCB B2B-XH-AM	0500005321	
R3,6,10-12,14,16,18,	Res. Carbon 1/4W 1kohm+-5%	0200994017		CN4	Plug, PCB 53331-0210	0501033019	
20,24				CN5	Plug, PCB B4P7-VH-B	0500011742	
R4,26	Res. Carbon 1/4W 4.7kohm+-5%	0200994178		CN8	Plug, PCB 179844-2	0501121020	
R5,7-9,13,21-23,25	Res. Carbon 1/4W 10kohm+-5%	0200994253		CN9	Plug, PCB 179844-1	0501121013	
R15,17	Res. Metal 1/5W 14kohm+-1%	0201028612		CN10	Plug, PCB B4P-SHF-1AA	0500006038	
R19	Res. Metal 1/5W 6.65kohm+-1%	0201028766		CN11	Plug, PCB B2P-VH-B	0500011124	
C1,4	Cap. Plastic 0.1mfd	0300894835		CN12	Plug, PCB B2P-VH-B-C	0500011568	
C2,3	Cap. Ceramic 4700pF	0300209141		CN13	Plug, PCB B2P-VH-B-R	0500011148	
C5	Cap. Elec. 50V 2200mfd	0301206026		CN15	Plug, PCB B2B-XASK-1-A	0501045012	
C6,7,21,24,27	Cap. Elec. 25V 10mfd	0300004258		JM1-3,5,7-9,11,12,	Wire 0.6dia. L=5mm	9701260010	
C8,18,19,22,25,28,	Cap. Ceramic 50V 0.1mfd	0300988251		14-16,18,19-31,			
29,34,36				34,36,37,FJ1,3,4,			
C9-11,14-16,30	Cap. Ceramic 50V 0.01mfd	0300013113		CJ12,13			
C17	Cap. Elec. 25V 100mfd	0300051375		JM4,6,10,13,17,32,	Wire 0.6dia. L=10mm	9700025016	
C20,23,26,35	Cap. Ceramic 50V 1000pF	0300011096		35,45,47			
C33	Cap. Elec. 25V 2200mfd	0300915417		JM38-41,44,46	Wire 0.6dia. L=15mm	9700672012	
RC1	RC Module ARCL14FS103J102J103M	0200301020		JP1	Wire 0.6dia. L=7.5mm	9701076017	
SA1	Arrester DSA-362MA-05	0600168032		E	Wire w/Terminal L=210 GRN	9701325016	

STANDARD ACCESSORIES

INDOOR UNIT ACCESSORIES

Name and Shape	Q'ty	Application	Part No.
Coupler heat insulation	2	For indoor side pipe joint	9350716029 9352766015 } 1 each
Remote control unit cord clamp	10	For installing the remote control unit cord	313714181904
Screw	10	For installing the remote control unit cord clamp	301141153027
	2	For installing the remote control unit	301141134166
Special nut A (large flange)	4	For installing indoor unit	313005446653
Special nut B (small flange)	4	For installing indoor unit	313005446759
Remote control unit	1	Installation to indoor unit	(Cooling model) 9703173028
			(Cooling & Heating model) 9703173011
Template	1	For ceiling hole cutting	9363173000
Binder	2 (large)	For remote control unit cord binding	313035356905
	1 (small)	For remote control unit and remote control unit cord binding	313361275805
Blower cover insulation	2	For discharged air	9363265002
Hook wire	2	For installing intake grille	9363168006

OUTDOOR UNIT ACCESSORIES

Hexagon wrench	1	For opening the refrigerant valve on the outdoor unit	9351228019
Drain pipe	1	For outdoor unit drain piping work [Heat & Cool (Reverse cycle) model only]	9303029015
Drain cap	2		313166024302

MANUFACTURER :

Fuji Denki Sosetsu Co., Ltd.

Tokyo, Japan

0102K1804

February 2001 Printed in Japan